# H series

**RGC (ООО «РОССИ»)** – единственный официальный представитель компании Rossi S.p.A. на территории Российской Федерации и стран Таможенного Союза

Email: **info@rgc-group.ru**

Тел.: **8 (831) 410-35-45**

www.rgc-group.ru

Rossi
Habasit Group

## Helical and bevel helical gear reducers

2586-01.02

| Size | $M_{N2}$ | - $F_{r2}$ | 2I | 3I | 4I | CI | C2I | C3I |
|---|---|---|---|---|---|---|---|---|
| **4000** | 109 kN m | - 200 kN | 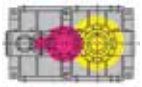 | 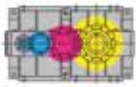 | 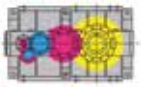 | 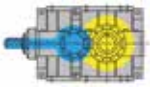 | 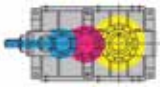 | 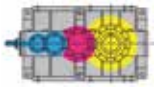 |
| **4001** | 122 kN m | - 200 kN | 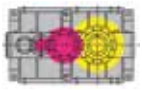 | 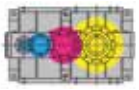 | 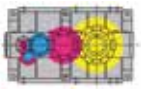 | 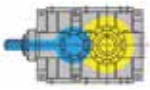 | 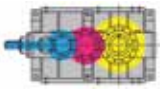 | 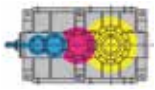 |
| **4500** | 140 kN m | - 250 kN | 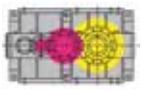 | 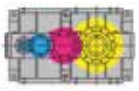 | 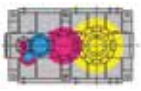 | 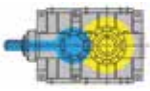 | 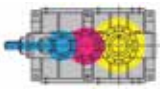 | 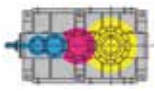 |
| **4501** | 160 kN m | - 250 kN | 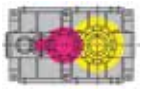 | 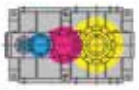 | 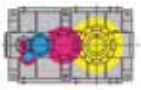 | 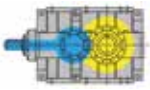 | 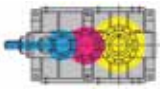 | 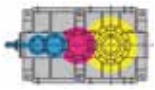 |
| **5000** | 206 kN m | - 315 kN | 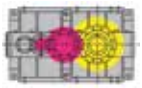 | 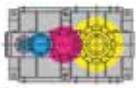 | 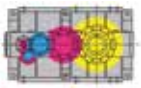 | – | 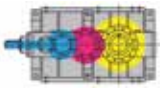 | 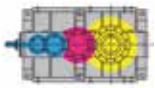 |
| **5001** | 250 kN m | - 315 kN | 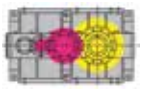 | 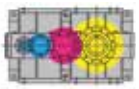 | 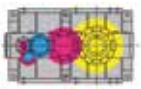 | – | 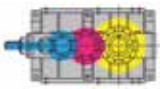 | 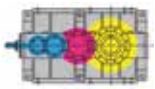 |
| **5600** | 280 kN m | - 400 kN | 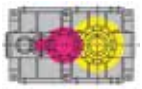 | 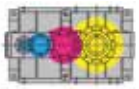 | 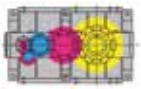 | – | 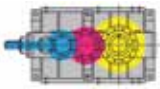 | 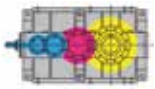 |
| **5601** | 315 kN m | - 400 kN | 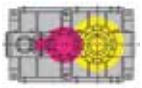 | 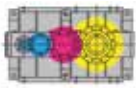 | 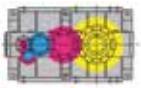 | – | 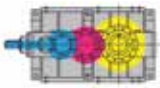 | 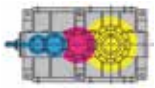 |
| **6300** | 400 kN m | - 400 kN | 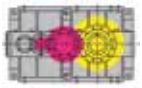 | 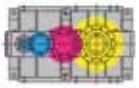 | 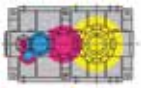 | – | 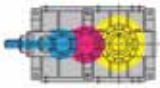 | 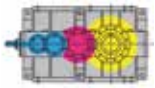 |
| **6301** | 450 kN m | - 400 kN | 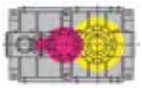 | 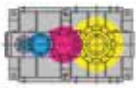 | 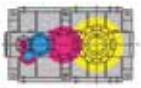 | – | 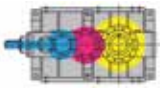 | 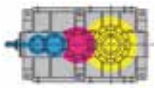 |
| **7101** | 710 kN m | - 630 kN | 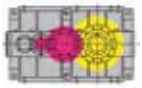 | 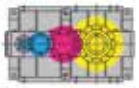 | 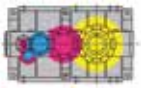 | – | 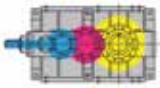 | 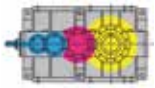 |
| **8001** | 1000 kN m | - 900 kN | 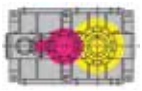 | 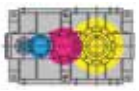 | 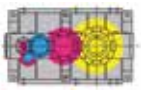 | – | 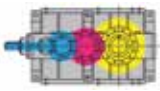 | 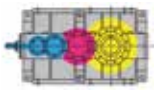 |

# Contents


Overview ..... 4

1 - General specifications ..... 11 **1**

2 - Designation ..... 15 **2**

3 - Service factor fs ..... 19 **3**

4 - Thermal power Pt [kW] ..... 23 **4**

5 - Selection ..... 27 **5**

6 - Structural and operational details ..... 33 **6**

7 - Helical gear reducer selection tables ..... 41 **7**

8 - Dimensions, designs, mounting positions (helical gear reducers) ..... 49 **8**

9 - Bevel helical gear reducer selection tables ..... 63 **9**

10 - Dimensions, designs, mounting positions (bevel helical gear reducers) ..... 71 **10**

11 - Radial loads ..... 85 **11**

12 - Accessories and non-standard designs ..... 103 **12**

13 - Installation and maintenance ..... 127 **13**

Technical formulae ..... 133


2586-01.02

# Your worldwide partner for high quality solutions

## Who we are

In brief:

1953 Founded as a family business and still privately owned today

Rossi in the 70's

70's First in Italy to adopt a completely modular system for helical and bevel helical gear reducers; first in Italy to adopt a case hardened, tempered, ground gear pairs on helical and bevel helical gear reducers

80's Worm gear reducers and gearmotors with universal mounting, single-piece housing and ZI involute profile; Extension of the direct sales organization abroad with the addition of German, English, French and Spanish subsidiaries.

90's Helical and bevel helical gear reducers and gearmotors with universal mounting and single-piece housing; first transmission manufacturer in Italy and second in Europe to obtain Quality System Certification ISO 9001.

1994 The only manufacturer to offer 3-year-warranty

1997 Acquisition of Seimec (Rossi Motor Division)

2002 Acquisition of SMEI (Rossi Planetary Division, WIND)

Rossi Planetary Gear Reducer Division

2003 ISO 9001 - 2000 (Vision 2000)

2004 New affiliated company in U.S.A.
Habasit acquires important share in Rossi, to reinforce global presence and develop growth strategy

2009 (July) Habasit Holding owns 100% Rossi

2010 Logo and Company name change: from "Rossi Motoriduttori" to "Rossi S.p.A."

Rossi Industrial Gear Reducer Division, today

2014-'16 Our US, UK, Brazil and China subsidiaries move to new facilities, striving to improve our customer service thanks to our modern structures and technologies

For more than 60 years we have been developing our business for the most demanding applications in order to become one of the world's leading gearbox and gearmotor manufacturers. Even in the toughest environment, we are recognized for providing state of the art technology, solid value and commitment to our customers.

2586-01.02

## Where you can find us

Close to you, with facilities on six continents and each with a direct sales system to provide excellent service.
Visit our website to find your nearest facility.
We are where you need us to be.

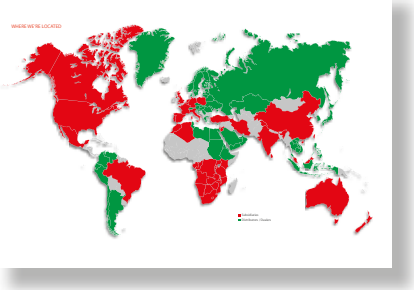

## What we believe in

Choosing the drive with the right technical specifications is vital for reliability and economy.
We believe in integrity, ethical behavior, experience, creativity, innovation, good teamwork and above all customer focus: this what we at Rossi believe in.
We strive to be a reliable company with the right flexibility and know-how to respond to all market requests, all over the world, in all application fields, without ignoring our commitment to the environment and value on all human safety

## What we can do for you

Rossi employs highly skilled specialists in different fields, there to provide you with the support and experience needed to find the best solution for your application and commercial demands, and to accompany you step by step through the entire supply process.

## What you can do for us, to help us improve

You are at the center of all we do, that is why we want your feedback and suggestions on how we can improve.
You know your business better than anyone and by knowing what works for you will allow us to improve our service offering to you.
We regard every relationship as a partnership and look for mutual benefits that will enhance our partnership at all times.

## Who you can contact

A well-organized Global after-sale service with the sole purpose of getting our customers back up and running quickly and cost effectively.
Our online Rossi for You portal, allowing you to have 24/7/365 day access to all the documentations concerning our supplies, order tracking, and news in real time.

2586-01.02

## What we do

Our wide standard product range and design allows us to provide the customer with the right engineered solution for every application including a 3 year worldwide warranty.

### Gearmotors

| Type of gear | | Catalog |
|---|---|---|
| Worm gearmotors | | A |
| Standardfit worm gearmotors | | AS |
| Coaxial gearmotors | | E |
| Standardfit coaxial gearmotors | | ES |
| Helical and bevel helical gear reducers | | G |
| Planetary (in-line and bevel helical) gearmotors | | EP |

### Gear reducers

| Type of gear | | Catalog |
|---|---|---|
| Worm gear reducers | | A |
| Helical and bevel helical gear reducers | | G |
| Heavy duty helical and bevel helical gear reducers | | H |
| Planetary (in-line and bevel helical) gear reducers | | EP |
| Right angle shaft gear reducers | | L |
| Shaft mounted helical gear units | | P |

2586-01.02

## Motors

| Type | | Catalog |
|---|---|---|
| Asynchronous three-phase high efficiency and premium efficiency motors | | TX |
| Standard and high efficiency brake motors | | TX |

## Motion control

| Type | | Catalog |
|---|---|---|
| Worm, coaxial, helical and bevel helical servo gear reducers | | SR |

## Specific industrial segments

| Type | | Catalog |
|---|---|---|
| Extruders, Parallel shaft gear reducers and gearmotors | | GX |
| Combined units | | |
| Slewing drives | | EP |
| Heavy duty gear reducers on swing bases | | RE |

2586-01.02

# Features and **Benefits**

10 sizes with nominal torque from 109 to 450 kN m

Increased performance maintaining the same final reduction center distance, when compared with Rossi's previous catalog H02

Sizes based on uniform incremental steps

- **Improved ratings for the same required torque and more compact gear reducers compared with previous catalog H02**

Gears designed, machined and measured according to high quality requirements (tooth grinding accuracy class ≤ DIN 6, both for cylindrical and bevel gears)

Bevel gears machined in closed-loop grinding process with correction of the measured deviations

Gear housings made with single placement bore machining and controlled through very high precision three-dimensional measuring systems

Load rating, according to standards, based on surface durability (pitting) and tooth bending strength

- **Reliable and repeatable performances, suitable to satisfy Customer specifications**

Horizontal center split housing cast in two halves from spheroidal cast iron (UNI ISO 1083) with reinforced stiffening ribs

- **Gear reducers suitable for low temperature operation (down to -20° C) without installation of accessories**

Flexible mounting arrangements - typical mountings include horizontal, vertical, inclined and oscillating mounting positions

- **Easy maintenance**

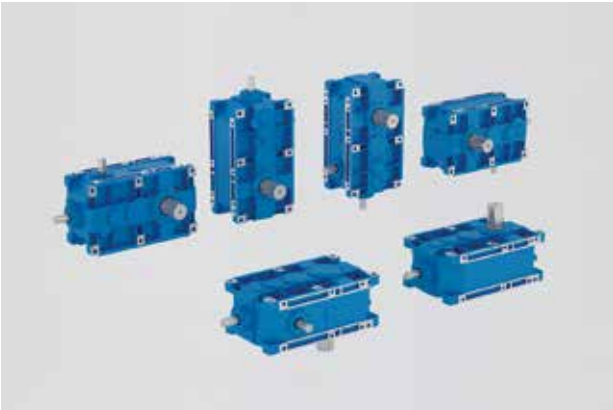

2586-01.02

# Features and **Benefits**

Standard painting to UNI EN ISO 12944-2 (corrosivity class C3)

Special painting cycles up to corrosivity class C5-M

- **Suitable for applications in aggressive or marine environments**
- **Possibility of international certifications**

**Coating layers (Class C5-M)**

Dual compound zink epoxy paint

Dual-compound epoxy primer

Water-based polyurethane enamel

Final on load inspection on test bench for all gear units manufactured, in order to grant high reliability and quality

- **Trouble-free commissioning**

Several non-standard designs for all sizes:
Additional intermediate shaft overhung for bevel helical gear reducers
Backstop device
High and low speed shaft seal with labyrinth and grease feeder (taconite)

- **Product configuration according to customer's specifications, stock availability**

Several accessories available for all sizes:
pre-arrangement for vibration monitoring devices
oil heater
oil temperature probes
bearing temperature probes

- **Remote control for an user friendly maintenance**
- **Totally reduced cost of ownership**

2586-01.02

# Symbols and units of measure

Symbols used in the catalog and formulae, in alphabetical order, with relevant units of measure.

| Symbol | Definition | Units of measure | | | Notes |
|---|---|---|---|---|---|
| | | In the catalog | In the formulae | | |
| | | | Technical System | SI[1] System | |
| | dimensions | mm | – | | 1 inch (in) = 24,5 mm; 1 foot (ft) 30,48 cm |
| $a$ | acceleration | – | $m/s^2$ | | |
| $d$ | diameter | – | m | | |
| $f$ | frequency | Hz | Hz | | |
| $fs$ | service factor | | | | |
| $ft$ | thermal factor | | | | |
| $F$ | force | – | kgf | N[2] | 1 kgf ≈ 9,81 N ≈ 0,981 daN |
| $F_r$ | radial load | N | – | | |
| $F_a$ | axial load | N | – | | |
| $g$ | acceleration of gravity | – | $m/s^2$ | | normal value 9,81 $m/s^2$ |
| $G$ | weight (weight force) | – | kgf | N | 1 pound (lbf) = 4,4482 N |
| $Gd^2$ | dynamic moment | – | kgf $m^2$ | – | |
| $i$ | transmission ratio | | | | $i = \frac{n_1}{n_2}$ |
| $I$ | electric current | – | A | | |
| $J$ | moment of inertia | kg $m^2$ | – | kg $m^2$ | |
| $L_h$ | bearing life | h | – | | |
| $m$ | mass | kg | kgf $s^2$/m | kg[3] | |
| $M$ | torque | N m | kgf m | N m | 1 kgf m ≈ 9,81 N m ≈ 0,981 daN m |
| $Mf$ | braking torque | N m | kgf m | N m | 1 kgf m ≈ 9,81 N m ≈ 0,981 daN m |
| $n$ | angular speed | $min^{-1}$ | rev/min | – | 1 $min^{-1}$ ≈ 0,105 rad/s |
| $P$ | power | kW | CV | W | 1 CV ≈ 736 W ≈ 0,736 kW |
| $Pt$ | thermal power | kW | – | | |
| $r$ | radius | – | m | | |
| $R$ | variation ratio | | | | $R = \frac{n_{2\,max}}{n_{2\,min}}$ |
| $s$ | distance | – | m | | |
| $t$ | Celsius temperature | °C | – | | 1 °F = 1,8 · °C + 32 |
| $t$ | time | s<br>min<br>h<br>d | s | | 1 min = 60 s<br>1 h = 60 min = 3 600 s<br>1 d = 24 h = 86 400 s |
| $U$ | voltages | V | V | | |
| $v$ | velocity | – | m/s | | |
| $W$ | work, energy | MJ | kgf m | J[4] | |
| $z$ | frequency of starting | starts/h | – | | |
| $\alpha$ | angular acceleration | – | $rad/s^2$ | | |
| $\eta$ | efficiency | | | | |
| $\eta_s$ | static efficiency | | | | |
| $\mu$ | friction coefficient | | | | |
| $\varphi$ | plane angle | ° | rad | | 1 rev = 2 π rad<br>$1° = \frac{\pi}{180}$ rad |
| $\omega$ | angular velocity | – | – | rad/s | 1 rad/s ≈ 9,55 $min^{-1}$ |

Additional indexes and other signs

| Ind. | Definition |
|---|---|
| max | maximum |
| min | minimum |
| N | nominal |
| 1 | relating to HSS (input) |
| 2 | relating to LSS (output) |
| ÷ | from ... to |
| ≈ | approximately equal to |
| ⩾ | greater than or equal to |
| ⩽ | less than or equal to |

1) SI are the initials of the International Unit System, defined and approved by the General Conference on Weights and Measures as the only system of units of measure.
See CNR UNI 10 003-84 (DIN 1 301-93 NF X 02.004, BS 5 555-93, ISO 1 000-92).
UNI: Ente Nazionale Italiano di Unificazione.
DIN: Deutscher Normenausschuss (DNA).
NF: Association Française de Normalisation (AFNOR).
BS: British Standards Institution (BSI).
ISO: International Organization for Standardization.
2) Newton [N] is the force imparting an acceleration of 1 $m/s^2$ to a mass of 1 kg.
3) Kilogramme [kg] is the mass of the prototype kept at Sèvres (i.e. 1 $dm^3$ of distilled water at 4 °C).
Joule [J] is the work done when the point of application of a force of 1 N is displaced through a distance of 1 m.

2586-01.02

# 1 - General specifications

**Closer size and performance steps; 5 size pairs (standard and strengthened) with final reduction center distance to R 20 series, for a total of 12 sizes with performance intervals by about 18%**

**Universal mounting**: suitable for **horizontal** or **vertical mounting**

**Rigid and precise spheroidal cast iron housing; high oil capacity**

**Gear pairs design especially studied to obtain high resistance, motion regularity, low noise and high efficiency with consequent low heating**

**High, reliable and tested performances**

**Prearranged for backstop device, possibility of double extension low and high speed shaft**

**Possibility of withstanding high loads on shaft ends**

**Possibility of obtaining multiple and 90° drives with no restriction on direction of rotation of input/output shafts**

**Manufacturing and product management flexibility**



**High manufacturing quality standard**

**Minimum maintenance requirements**

Large size gear reducers **produced in series** specifically conceived for granting highest reliability in **heaviest application conditions**. This series combines and exalts the **traditional qualities** of helical and bevel helical gear reducers – **strength, efficiency, compactness, reliability** – with advantages derived from modern design, manufacturing and operating criteria – **universality and application ease, wide size range, service, economy** – the advantages typically associated with high quality gear reducers produced in series.

## Main structural features

Main specifications are:

- **universal** mounting with feet integral with housing on 2 faces or frontal with spigot on low speed shaft cover (see ch. 6);
- closer size and performance steps; 5 size pairs (standard and strengthened) with final reduction center distance to R 20 series, for a total of **12 sizes** with performance intervals by about 18%; the size pairs are obtained with the same housing and many components in common;
- gear reducer overall sized so as to permit the transmission of **high nominal and maximum torques,** and to withstand **high loads on** the high and low speed **shaft ends**;
- cylindrical low speed shaft end with key (right, left or double extension);
- cylindrical high speed shaft end with key;
- possibility of **second high speed shaft extension** (excluding C3I);
- improved and upgraded modular construction both for component parts and assembled product;
- standardized dimensions and compliance with standards;
- **spheroidal cast iron** housing (400-15 UNI ISO 1083); stiffening ribs and high oil capacity;
- bearings: swinging roller bearings on low speed and intermediate shafts; **coupled** taper roller bearings plus one swinging roller bearing on high speed shafts with train of gears 2I, CI, C2I, C3I and intermediate train of gears CI and C2I, taper roller bearing plus one cylindrical roller bearing on high speed shaft with train of gears 3I;
- oil bath lubrication; synthetic or mineral oil (ch. 13) including filler plug with **valve**, drain and level plug; sealed;
- additional bearings lubrication through proper pipelines or pump;
- natural or forced cooling (by fan, coil or independent cooling unit with heat exchanger, see ch. 12);
- metal plugs; magnetic drain plug;
- paint: external coating in water-soluble dual-compound polyurethan enamel resistant to atmospheric and aggressive agents (corrosivity class C3 ISO 12944-2); suitable for further coats only with dual-compound products after degreasing and sanding; color blue RAL 5010 DIN 1843, other colors and/or painting cycles on request, see ch. . 12); internal protection in synthetic paint appropriate for resistance to mineral oils or to polyalphaolefines synthetic oils;
- optional designs: backstop device (always prearranged), shaft mounting arrangements, **hollow** low speed shaft with shrink disc or keyway, special paints, etc. (ch. 12).

2586-01.02

### Train of gears

- 2, 3, 4 cylindrical gear pairs (helical gear units);
- 1 bevel gear pair plus 1, 2, 3 helical gear pairs (bevel helical type);
- 5 sizes pairs (normal and strengthened); with final reduction center distance to R 20 series for a total of **12 sizes**;
- nominal transmission ratios to R 20 series for trains of gears 2I ($i_N$ = 10 ... 25); 3I ($i_N$ = 25 ... 125, excluding $i_N$ = 112), CI ($i_N$ = 8 ... 20) and C2I ($i_N$ = 20 ... 125, excluding $i_N$ = 112); to R 10 series for 4I ($i_N$ = 125 ... 315) and C3I ($i_N$ = 125 ... 315);
- casehardened and hardened gear pairs in 16 CrNi4 or 20 MnCr5 (depending on size) and 18 NiCrMo5 steel, according to UNI 7846-78;
- helical toothed cylinddrical gear pairs with **ground** profile;
- GLEASON spiral bevel gear pairs with **ground** profile;
- gear load capacity calculated for tooth breakage and pitting.



### Specific standards

- nominal transmission ratios and principal dimensions according to UNI 2016 (DIN 323-74, NF X 01.001, BS 2045-65, ISO 3-73);
- toothing profile to UNI 6587-69 (DIN 867-86, NF E 23.011, BS 436.2-70, ISO 53-74);
- shaft heights to UNI 2946-68 (DIN 747-76, NF E 01.051, BS 5186-75, ISO 496-73);
- medium series fixing holes to UNI 1728-83 (DIN 69-71, NF E 27.040, BS 4186-67, ISO/R 273);
- cylindrical shaft ends to UNI ISO 775-88 (DIN 748, NF E 22.051, BS 4506-70, ISO/R 775) with tapped butt-end hole to UNI 9321 (DIN 332 BI. 2-70, NF E 22.056) excluding correspondence d-D;
- parallel keys UNI 6604-69 (DIN 6885 BI. 1-68, NF E 27.656 and 22.175, BS 4235.1-72, ISO/R 773-69);
- mounting positions derived from CEI 2-14 (DIN EN 60034-7, IEC 34.7);
- load capacity verified according to UNI 8862, DIN 3990, AFNOR E 23-015, ISO 6336; thermal capacity verified.

2586-01.02

Page intentionally left blank

# 2 - Designation

2

**Designation code**

**R C2I 5600 U O 1 A - 25,4 B3**

INPUT SPEED
(see page 18)

MOUNTING POSITION
(see page 17)

TRANSMISSION RATIO
(see pages 7, 9)

DESIGN
**A** standard
... others (see ch. 8, 10)

MODEL
**1**

SHAFT POSITIONS
**P** helical
**O** bevel-helical

MOUNTING
**U** universal

SIZE
**4000 ... 8001**

TRAIN OF GEARS
Helical
**2I** 2 helical gear pairs
**3I** 3 helical gear pairs
**4I** 4 helical gear pairs

Bevel-helical
**CI** 1 bevel and 1 helical gear pair
**C2I** 1 bevel and 2 helical gear pairs
**C3I** 1 bevel and 3 helical gear pairs

MACHINE
**R** gear reducer

2586-01.01

## Gear reducer mounting position

**Mounting positions of gear reducers and gearmotors are stated at ch. 8, 10**. Here following see some designation examples of important mounting positions.

1. **Standard** mounting position **B3**; in case of no specific needs, **prefer the adoption of B3 mounting positions** as it is the most advised from a technical and economic point of view (maximum simplification of lubrication system, lower oil splash, lower gear reducer heating, stock availability).

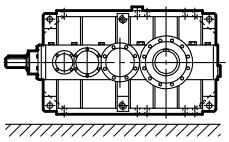

2. **Non-standard** mounting positions

2a. Mounting position to catalog (see ch. 8, 10), **one only** and **fixed**, differing from B3; e.g.: mounting position **B6**

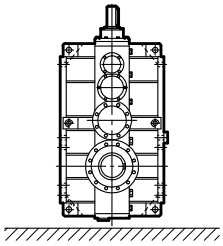

2b. **Inclined** and **fixed** mounting position ; e.g.: mounting position **B6 - 20° B3**

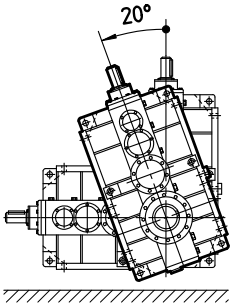


2c. **One only mounting** position **but defined within a predetermined angle**; e.g.: mounting position included among **B6 - 20° B3 / B6 - 70° B8**

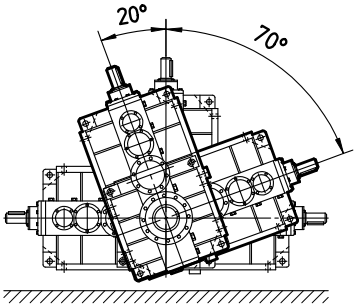


2d. **Oscillatory mounting position** (gear reducer oscillating when running); e.g.: mounting position **B6 - 20° B3 / B6 - 70° B8 oscillatory**

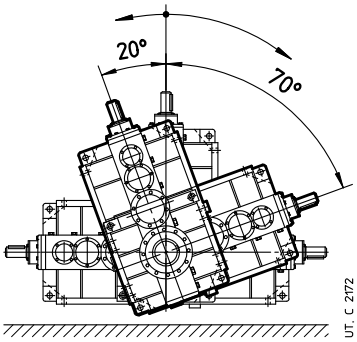


2586-01.01

### Input speed

The designation is **always** to be completed stating the **input speed** $n_1$, chosen among the available ones as per catalog: **1 800** $min^{-1}$ (4 poles 60 Hz), **1 500** $min^{-1}$ (4 poles 50 Hz), **1 200** $min^{-1}$ (6 poles 60 Hz), **1 000** $min^{-1}$ (6 poles 50 Hz), **750** $min^{-1}$ (8 poles 50 Hz),**90** $min^{-1}$ (applications at low input speed).

Example:

R C2I 4501 UO1H-81,2 B3 $n_1$ **= 1 800** $\mathbf{min^{-1}}$

R 3I 5600 UP1A-127 B3 $n_1$ **= 1 000** $\mathbf{min^{-1}}$

## Accessories and non-standard designs

In the event of a gear reducer being required in a design different from those stated above, specify it in detail (ch. 12).

# 3 - Service factor *fs*

Service factor *fs* takes into account the different running conditions (nature of load, running time, frequency of starting, speed $n_2$, other considerations) which must be referred to when performing calculations of gear reducer selection and verification.

The power and torques shown in the catalog are nominal values (i.e. valid for *fs* = 1).

The **minimum service factor required** is given by the following ratio:

$$\boldsymbol{fs} \text{ required} \geqslant \boldsymbol{fs}_1 \cdot \boldsymbol{fs}_2 \cdot \boldsymbol{fs}_3 \cdot \boldsymbol{fs}_4 \cdot \boldsymbol{fs}_5$$

where $fs_1$ … $fs_5$ are stated in the following tables.

Service factor $\boldsymbol{fs}_1$ based on the **nature of load** and **running time**

| Nature of load[1] of the driven machine | | $\boldsymbol{fs}_1$ Running time [h/d] | | | | |
|---|---|---|---|---|---|---|
| Ref. | Description | **2** | **4** | **8** | **16** | **24** |
| **a** | **Uniform** | 1 | 1 | 1 | 1,18 | 1,32 |
| **b** | **Moderate overloads** (1,6 times the normal load) | 1,12 | 1,18 | 1,25 | 1,5 | 1,7 |
| **c** | **Heavy overloads** (2,5 times the normal load) | 1,4 | 1,5 | 1,7 | 2 | 2,24 |

Service factor $\boldsymbol{fs}_2$ based on **nature of load** and of **frequency of starting**

| Nature of load[1] of the driven machine | | $\boldsymbol{fs}_2$ Frequency of starting *z* [starts/h] | | | | | |
|---|---|---|---|---|---|---|---|
| Ref. | Description | **1** | **2** | **4** | **8** | **16** | **32** |
| **a** | **Uniform** | 1 | 1,06 | 1,12 | 1,18 | 1,25 | 1,5 |
| **b** | **Moderate overloads** (1,6 times the normal load) | 1 | 1 | 1,06 | 1,12 | 1,18 | 1,4 |
| **c** | **Heavy overloads** (2,5 times the normal load) | 1 | 1 | 1 | 1,06 | 1,12 | 1,32 |

Service factor $\boldsymbol{fs}_3$ based on **motor type**

| Motor type Description | | $\boldsymbol{fs}_3$ |
|---|---|---|
| **Electric, turbine** | | 1 |
| **Electric three-phase with brake** | | 1,06 [4] |
| **Internal combustion** | multi-cylinder | 1,25 |
| | single-cylinder | 1,5 |

Service factor $\boldsymbol{fs}_4$ based on **reliability level**

| Reliability level [5] | $\boldsymbol{fs}_4$ |
|---|---|
| **Standard** | 1 |
| **Average** | 1,25 |
| **High** | 1,4 |

Service factor $\boldsymbol{fs}_5$ based on **output angular speed** $\boldsymbol{n}_2$

| Output speed $n_2$ [min$^{-1}$] | $\boldsymbol{fs}_5$ |
|---|---|
| **> 560** | 1,32 |
| **560 – 355** | 1,25 |
| **355 – 224** | 1,18 |
| **224 – 140** | 1,12 |
| **140 – 90** | 1,06 |
| **⩽ 90** | 1 |

Details and considerations about service factor.

*fs* values stated above are valid for:

– maximum time on overload 15 s, on starting 3 s; if over and/or subject to heavy shock effect, consult us;

– a whole number of overload cycles (or start) **imprecisely completed** in 1, 2, 3 or 4 revolutions of low speed shaft; if **precisely**, a continuous overload should be assumed;

Motors having a starting torque not exceeding nominal values (star-delta starting, particular types of motor operating on direct current, and single-phase motors), and particular types of coupling between gear reducer and motor, and gear reducer and driven machine (flexible, centrifugal, fluid and safety couplings, clutches and belt drives) affect service factor favourably, allowing its reduction in certain heavy-duty applications; consult us for verification.

1) For indication on the type of load of the driven machine according to the application, see table on next page.
4) For Y- Δ starting, running with inverter or with «soft start» devices, $fs_3$ = 1.
5) Reliability degrees higher than normal are required in presence of very difficult maintenance, great importance of gear reducer in the production cycle, safety,etc.

## Classification of nature of load according to application

| Application | Ref. load * |
|---|---|
| **Stirrers and mixers** | |
| Liquids: | |
| – constant density | a |
| – varying density, solids in suspension, high viscosity | b |
| concrete mixers, mullers, flash mixers | c |
| concrete mixers, mullers, flash mixers | a |
| **Feeders and batchers** | |
| rotary (roller, table, sector) | a, b |
| belt, screw, plate | c |
| reciprocating, shaker | a |
| **Compressors** | |
| centrifugal (single-stage, multi-stage) | b |
| rotary (vane, lobe, screw) | b |
| axial | b |
| reciprocating: | c |
| – multi-cylinder | |
| – single-cylinder | |
| **Elevators** | |
| belt, centrifugal or gravity discharge, screw jacks, escalators | a, b |
| bucket, arm and tray elevators, paddle wheel, hoists, skips | b |
| man lifts, mobile scaffolding, passenger transport (cable cars, chair, ski, gondola lifts etc.) | a, b |
| **Excavators and dredges** | |
| cable reels, conveyors, pumps, winches (manoeuvring and utility), stackers, draining wheels | b |
| cutter head drives, cutters, excavators (bucket ladder, paddle wheel, cutter) | c |
| vehicles: | b |
| – on rails | c |
| – crawlers | |
| **Crushers and granulators** | b |
| sugar cane, rubber, plastics | c |
| minerals, stone | b |
| **Cranes, winches and travelling lifts** | b |
| travel (bridge, trolley, forks)[1] | a, b |
| slewing | |
| hoist [2] | a |
| **Food** | |
| cookers (cereals and malt), mash tubs | |
| slicers, dough mixers, meat grinders, beet slicers, centrifuges, peelers, wine-making plant, bottle/bin/cratewashers, rinsers, fillers, corkers, cappers, extruders, crate filling and emptying equipment | b |
| **Paper mills** | |
| winders, suction rolls, dryers, embossing machinery, bleachers, press rolls, coating rolls, paper rolls, beaters, and pulpers | a |
| agitators, mixers, extruders, chip feeders, calenders, felt dryers and stretchers, rag grinders, washers, thickeners | b |
| cutters, chippers, calenders (super), felt whippers, glazing machines, presses | c |

| Application | Ref. load * |
|---|---|
| **Lumber and woodworking industries** | |
| mechanical loaders, pallet stackers | a, b |
| conveyors for: | b |
| – boards, chips, waste | c |
| – logs | |
| machine tools (planing, cutting, cross-cut and re-sawing, tenoning, bevelling, moulding, sanding, sizing and scratch-brushing machinery etc.): | b |
| – feed drive | b, c |
| – cutter drive | |
| barkers: | b |
| – mechanical and hydraulic | c |
| – drum | |
| **Oil industry** | b |
| paraffin filter presses, chillers | c |
| rotary drilling equipment | |
| pumping equipment | |
| **Textile industry** | |
| calenders, cards, pickers, dryers, nappers, spinners, slashers, pads, soapers, washers, mangles, tenter frames, looms (Jacquard), warping machines, winders, knitting machines, dyeing machines, twisting frames, gig mills, cutters | b |
| **Clay working machinery** | |
| pug mills, extruders, rotary deslimers | b |
| brick and tile presses | c |
| **Rubber and plastics industries** | |
| extruders: | b |
| – plastics | c |
| – rubber | |
| mixing mills, warming mills, friction calenders, refiners, tubers and strainers, rolling mills | b |
| crackers, masticators | c |
| **Wrapping and stacking machinery** | |
| wrapping (film, cardboard), binding, strapping and labelling equipment | a |
| palletizing/depalletizing and stacking/unstacking machinery, palletizing robots | b |
| **Engineering machine tools** | |
| boring, shaping, planing, broaching, gear cutting and FMS machines, etc.: | b |
| – main drivers (cut and feed) | |
| auxiliary drives (tools magazine, chip conveyor, workpiece infeed) | a |
| **Mechanisms** | |
| indexing, crank and slotted link, Maltese cross, articulated parallelogram | b |
| rod and crank, cam control (cam and tappet, cam and rocker) | c |
| **Metal mills** | |
| shears: | b |
| – trimming, cropping, facing | c |
| – for sheet/plate, ingots, billets | |

| Application | Ref. load * |
|---|---|
| transverse drive rollers, draw benches, coilers, inverter, draglines, flattening rolls, bending rolls | b |
| pushers, descaling equipment, pipe welders, mill roll train drives, rolling mills, forging presses, billet croppers, power hammers, punches, impact extruders, tapping machines, straightening presses | c |
| Rollerways | b, c [3] |
| **Mills** | |
| rotary (rod, roller, pebble, ball) | b |
| hammer, pin crusher, centrifugal, impact, rolling (ball or roller) | c |
| **Pumps** | |
| rotary (gear, screw, lobe, vane) and axial | a, b |
| centrifugal: | |
| – liquids, constant density | a |
| – liquids, variable density or high viscosity | b |
| proportioning | b |
| alternative: single acting (⩾ 3 cylinders), ⩾ double acting (⩽ 2 cylinders) | b |
| – single acting (2 cylinders), double acting single cylinder | c |
| **Rotating drums** | |
| dryers, chillers, rotary kilns, washing machines | b |
| tumblers, cement kilns | c |
| **Transport conveyors** | |
| belts (plastic, rubber, metal) for: | |
| – fine grade loose material | a |
| – coarse grade loose material or discrete items | b |
| belt, apron, bucket, slat, tray, roller, screw, chain, overhead rail, assembly | |
| drag (slat, flight, chain, Redler, etc.) ground level chain, flow accumulating | b |
| reciprocating, shaker | |
| overhead power rail | b |
| **Sewage treatment** | c [4] |
| biological tanks (revolving disk) | |
| dewatering screws, collectors, rotary screens, thickeners, vacuum filters, anaerobic digestion tanks | a |
| aerators, rotary breakers | b |
| **Screen and riddles** | c |
| air washing, travelling water intake | |
| rotary (stone, gravel, cereals) | a |
| vibrating screens, riddles, jigs | b |
| **Fans** | c |
| small diameter (centrifugal, axial-flow) | a |
| large diameter (mines, furnaces, etc.) cooling towers (inducted or forced draft), ducted, piston | b |

* Nature of load reference admits of modification where precise knowledge of duty is available.
1) In the traverse movement of the bridge usually it is necessary to have at least fs > 1,6 and in the storeyard cranes fs > 2 (container handling).
2) For selection of fs to F.E.M./I-10.1987, consu+lt us.
3) See cat. S.
4) See supplement to cat. A design.

Page intentionally left blank

# 4 - Thermal power *P*t [kW]

# 4 - Thermal power *P*t [kW]

The nominal thermal power $Pt_N$, stated in red in the table, is that which can be applied at the gear reducer input, without exceeding 95 °C[1] approximately oil temperature when operating in following running conditions:

- input speed $n_1$ = 1 500 min$^{-1}$
- mounting position B3;
- continuous duty S1;
- maximum ambient temperature 20 °C (in the table the values also refer to 40 °C);
- maximum altitude 1 000 m above sea level;
- air speed ⩾ 1,25 m/s (typical value in presence of a self-cooled motor).

Nominal thermal power $\boldsymbol{Pt_N}$

| $T_{amb}$ | Train of gears | Gear reducer size $Pt_N$ [kW] | | | | | | |
|---|---|---|---|---|---|---|---|---|
| | | **4000, 4001** | **4500, 4501** | **5000, 5001** | **5600, 5601** | **6300, 6301** | **7101** | **8001** |
| **20 °C** | **2I** | 315 | 355 | 500 | 560 | 710 | 850 | 1 180 |
| | **3I** | 236 | 265 | 375 | 425 | 530 | 630 | 900 |
| | **4I** | 180 | 200 | 280 | 315 | 400 | 475 | 630 |
| | **CI** | 300 | 425 | – | – | – | – | – |
| | **C2I** | 236 | 265 | 375 | 425 | 530 | 630 | 900 |
| | **C3I** | 180 | 200 | 280 | 315 | 400 | 475 | 630 |
| **40 °C** | **2I** | 236 | 265 | 375 | 425 | 530 | 630 | 900 |
| | **3I** | 180 | 200 | 280 | 315 | 400 | 475 | 670 |
| | **4I** | 132 | 150 | 212 | 236 | 300 | 355 | 500 |
| | **CI** | 224 | 315 | – | – | – | – | – |
| | **C2I** | 180 | 200 | 280 | 315 | 400 | 475 | 670 |
| | **C3I** | 132 | 150 | 212 | 236 | 300 | 355 | 500 |

Always verify that the power applied $\boldsymbol{P_1}$ is lower than or equal to gear reducer thermal power $\boldsymbol{Pt_N}$ multiplied by correction coefficients $\boldsymbol{ft_1}$, $\boldsymbol{ft_2}$, $\boldsymbol{ft_3}$, $\boldsymbol{ft_4}$, $\boldsymbol{ft_5}$ (stated in the following tables) considering the various operating conditions:

$$\boldsymbol{P_1} \leqslant \boldsymbol{Pt_N} \cdot \boldsymbol{ft_1} \cdot \boldsymbol{ft_2} \cdot \boldsymbol{ft_3} \cdot \boldsymbol{ft_4} \cdot \boldsymbol{ft_5}$$

When the power applied is not constant and when the exact load cycle is given, it is possible, or advisable, to calculate the equivalent power applied, according to the formula:

$$\boldsymbol{P}_{1\,eq\,th} = \frac{1}{\eta}\sqrt[3]{\frac{P_{2_1}^3 \cdot t_1 + P_{2_2}^3 \cdot t_2 + \ldots + P_{2_i}^3 \cdot t_i + \ldots + P_{2_n}^3 \cdot t_n}{t_c}}$$

where:
η is the gear reducer efficiency (see ch. 6);
$P_{2i}$ [kW] is the power, referred to the gear reducer output, required in the time interval $t_i$ [s];
$t_c = t_1 + t_2 + \ldots + t_i + \ldots + t_n$ is the total duration of load cycle [s].

In these cases choose factor $\boldsymbol{ft_2}$ from the continuous duty column S1.

Whenever the thermal verification should not be satisfied, in spite the prearrangement of cooling system, it is possible to install an **independent cooling unit with heat exchanger** (see ch. 12); consult us.

Thermal power needs not be taken into account when maximum duration of continuous running time is 1 – 3 h (from small to large gear reducer sizes) followed by rest periods long enough to restore the gear reducer to near ambient temperature (likewise 2 – 4 h). For maximum ambient temperature higher than 50 °C or lower than 0 °C consult us.

1) Corresponding to an average temperature of the external housing surface of approximately 85 °C; locally housing temperature can achieve the oil temperature.
3) If, simultaneously, forced cooling with coil is acting, multiply the values by 1,8.
4) For positions, dimensions and design verification see ch. 12.
5) Value also valid for electric fan (installed by the Buyer).
6) With axial fan, values are to be multiplied by 1,12. Consult us.
7) (Duration of running on load / 60) · 100 [%].

## 4 - Thermal power *P*t [kW]

Thermal factor $ft_1$ (= $ft_{1a} \cdot ft_{1b}$) according to **cooling system** and **input speed** $n_1$

| Cooling system | | | | $ft_{1a}$, $ft_{1b}$ input speed $n_1$ [min$^{-1}$] 750 | 1 000 | 1 200 | 1 500 | 1 800 |
|---|---|---|---|---|---|---|---|---|
| $ft_{1a}$ | Natural convection | train of gears | 2I, CI | 1,18 | 1,12 | 1,06 | 1 | 0,85 |
| | | | 3I, 4I, C2I, C3I | 1,06 | 1,06 | 1,03 | 1 | 0,95 |
| $ft_{1b}$ | Forced cooling[3) 4) 6)] | with 1 radial fan (helical gear units) | | 1,12 | 1,18 | 1,25 | 1,32 | 1,4 |
| | | with 2 radial fans (helical gear units)<br>with 1 radial fan (bevel helical gear units) | | 1,25 | 1,4 | 1,6 | 1,8[5)] | 2 |
| | with water coil[4)] | | | 2 | | | | |

Thermal factor $ft_2$ according to **ambient temperature** and **service**

| Maximum ambient temperature °C | $ft_2$ Continuous duty **S1** | Intermittent duty **S3 ... S6** Cyclic duration factor [%] for 60 min running[7)] 60 | 40 | 25 | 15 |
|---|---|---|---|---|---|
| **50** | 0,6 | 0,71 | 0,8 | 0,95 | 1 |
| **40** | 0,75 | 0,9 | 1 | 1,12 | 1,25 |
| **30** | 0,9 | 1,06 | 1,18 | 1,32 | 1,5 |
| **20** | **1** | 1,18 | 1,32 | 1,5 | 1,7 |
| **⩽ 10** | 1,12 | 1,32 | 1,5 | 1,7 | 1,9 |

Thermal factor $ft_4$ according to **altitude of installation**

| Altitude a.s.l. [m] | $ft_4$ |
|---|---|
| **⩽1 000** | **1** |
| **1 000 – 2 000** | 0,95 |
| **2 000 – 3 000** | 0,9 |
| **3 000 – 4 000** | 0,85 |
| **⩾ 4 000** | 0,8 |

Thermal factor $ft_3$ according to **mounting position** (see also ch. 8, 10): where it is not specified $ft_3$ = 1

| Train of gears | | $ft_3$ mounting position B3 | B6 | B7 | V5 | V6 |
|---|---|---|---|---|---|---|
| **2I** | | 1 | 0,9 | 0,8 | 0,8 | 0,9 |
| **3I** | | 1 | 0,9 | 0,8 | 0,8 | 0,9 |
| **4I** | | 1 | 0,9 | 0,8 | 0,8 | 0,9 |
| **CI** | UO1A, UO1A sin, UO1F, UO1F sin, UO1N, UO1N sin<br>UO1V, UO1V sin, UO1S, UO1S sin, UO1L, UO1L sin | 1 | 0,85 | 0,71 | 0,85 lower low speed wheel<br>0,71 upper low speed wheel | |
| | UO1H, UO1H sin, UO1G, UO1G sin, UO1M, UO1M sin | 0,85 | 0,71 | 0,6 | 0,71 lower low speed wheel<br>0,6 upper low speed wheel | |
| **C2I** | UO1A, UO1Asin, UO1F, UO1Fsin, UO1N, UO1Nsin<br>UO1V, UO1Vsin, UO1S, UO1Ssin, UO1L, UO1Lsin | 1 | 0,9 | 0,8 | 0,9 upper low speed wheel<br>0,8 lower low speed wheel | |
| | UO1H, UO1H sin, UO1G, UO1G sin, UO1M, UO1M sin | 0,9 | 0,8 | 0,71 | 0,8 upper low speed wheel<br>0,71 lower low speed wheel | |
| **C3I** | | 1 | 0,9 | 0,8 | 0,9 lower low speed wheel<br>0,8 upper low speed wheel | |

Thermal factor $ft_5$ according to cooling air speed on housing

| Air speed m/s | Installation environment | $ft_5$ |
|---|---|---|
| **< 0,63** | very small environment or without air movements or with protected gear reducer | consult us |
| **0,63** | small environment and with limited air movements | 0,71 |
| **1** | wide environment without air movements | 0,9 |
| **1,25** | wide environment with light air movements (e.g. gearmotor with self-cooled motor | **1** |
| **2,5** | open and cooled | 1,18 |
| **4** | with heavy air movements | 1,32 |

Page intentionally left blank

# 5 - Selection

5.1 - Preliminary considerations ..... 28
5.2 - Determining the gear reducer size ..... 29
5.3 - Verifications ..... 30
5.4 - Selection questionnaire ..... 30

## 5.1 - Preliminary considerations

### Motor power

Taking into account the efficiency of the gear reducer, and other drives – if any – motor power is to be as near as possible to the power rating required by the driven machine: accurate calculation is therefore recommended.

The power required by the machine can be calculated, seeing that it is related directly to the power-requirement of the work to be carried out, to friction (starting, sliding of rolling friction) and inertia (particularly when mass and/or acceleration or deceleration are considerable). It can also be determined experimentally on the basis of tests, comparisons with existing applications, or readings taken with ammeters or wattmeters.

An oversized motor would involve: a greater starting current and consequently larger fuses and heavier cable; a higher running cost as power factor (cosφ) and efficiency would suffer; greater stress on the drive, causing danger of mechanical failure, drive being normally proportionate to the power rating required by the machine, not to motor power.

In such cases, a detailed description of duty requirement must be made available: duration and frequency per hour of work cycle, acceleration and deceleration requirements if any, inertia, loads deriving from friction and work. In the absence of such data it is essential to provide all details which will permit their determination.

Only high values of ambient temperature, altitude, frequency of starting or other particular conditions require an increase in motor power.

### Input speed $n_1$

The maximum gear reducer input speed, valid for **continuous duty S1 and in absence of a forced lubrication system of gears and bearings** (**with eventual heat exchanger**), is stated in the following table according to train of gears and gear reducer size.

For intermittent duty or for particular needs, higher speeds are possible, but always lower than $n_{1peak}$; consult us.

Peak speed is admitted for a maximum duration of 5 s, including a proper rest period, or a low or null speed period for the cooling of gear reducer, especially on high speed shaft side.

For variable $n_1$, the selection should be carried out on the basis of $n_{1max}$, but it should also be verified on the basis of $n_{1min}$.

When there is a belt drive between motor and gear reducer, different input speeds $n_1$ should be examined in order to select the most suitable unit from engineering and economy standpoints alike.

Input speed should not be higher than 1 800 min$^{-1}$, unless conditions make it necessary; better to take advantage of the transmission, and use an input speed lower than 900 min$^{-1}$.

| Size | Train of gears | | | | | | | | | | | | | | | | | |
|---|---|---|---|---|---|---|---|---|---|---|---|---|---|---|---|---|---|---|
| | **2I** | | | **3I** | | | **4I** | | | **CI** | | | **C2I** | | | **C3I** | | |
| | $i_N$ | $n_{1max}$ min$^{-1}$ | $n_{1peak}$ min$^{-1}$ | $i_N$ | $n_{1max}$ min$^{-1}$ | $n_{1peak}$ min$^{-1}$ | $i_N$ | $n_{1max}$ min$^{-1}$ | $n_{1peak}$ min$^{-1}$ | $i_N$ | $n_{1max}$ min$^{-1}$ | $n_{1peak}$ min$^{-1}$ | $i_N$ | $n_{1max}$ min$^{-1}$ | $n_{1peak}$ min$^{-1}$ | $i_N$ | $n_{1max}$ min$^{-1}$ | $n_{1peak}$ min$^{-1}$ |
| **4000, 4001** | all | 1 600 | 2 120 | all | 1 800 | 2 240 | all | 1 800 | 2 360 | 8 ... 11,2<br>12,5 ... 18 | 1 250<br>1 600 | 2 120<br>2 120 | 20 ... 25<br>28 ... 40<br>45 ... 100 | 1 400<br>1 600<br>1 800 | 2 240<br>2 240<br>2 240 | all | 1 800 | 2 360 |
| **4500, 4501** | all | 1 600 | 2 120 | all | 1 800 | 2 240 | all | 1 800 | 2 360 | 8 ... 10<br>11,2 ...12,5<br>14 ... 20 | 1 180<br>1 250<br>1 600 | 2 120<br>2 120<br>2 120 | 22,4 ... 28<br>31,5 ... 45<br>50 ... 125 | 1 400<br>1 600<br>1 800 | 2 240<br>2 240<br>2 240 | all | 1 800 | 2 360 |
| **5000, 5001** | all | 1 250 | 2 000 | ⩽ 31,5<br>⩾ 35,5 | 1 600<br>1 800 | 2 120<br>2 120 | all | 1 800 | 2 240 | – | – | – | 22,4 ... 25<br>28 ... 40<br>45 ... 100 | 1 180<br>1 250<br>1 600 | 2 120<br>2 120<br>2 120 | all | 1 800 | 2 240 |
| **5600, 5601** | all | 1 250 | 2 000 | ⩽ 40<br>⩾ 45 | 1 600<br>1 800 | 2 120<br>2 120 | all | 1 800 | 2 240 | – | – | – | 25 ... 28<br>31,5 ... 45<br>50 ... 125 | 1 180<br>1 250<br>1 600 | 2 120<br>2 120<br>2 120 | all | 1 800 | 2 240 |
| **6300, 6301** | all | 1 060 | 1 900 | ⩽ 31,5<br>35,5 ... 50<br>⩾ 56 | 1 400<br>1 600<br>1 800 | 2 000<br>2 000<br>2 000 | all | 1 800 | 2 120 | – | – | – | 28 ... 35,5<br>40 ... 56<br>63 ... 100 | 1 180<br>1 250<br>1 600 | 2 000<br>2 000<br>2 000 | all | 1 800 | 2 120 |
| **7101** | ⩽ 14<br>⩾ 16 | 900<br>1 060 | 1 400 | ⩽ 35,5<br>40 ... 50<br>⩾ 56 | 1 180<br>1 400<br>1 700 | 2 000 | ⩽ 160<br>⩾ 200 | 1 600<br>1 800 | 2 120 | – | – | – | ⩽ 40<br>⩾ 45 | 900<br>1 180 | 1 700 | ⩽ 125<br>160<br>⩾ 200 | 1 400<br>1 600<br>1 800 | 2 120 |
| **8001** | ⩽ 14<br>⩾ 16 | 800<br>900 | 1 250 | ⩽ 35,5<br>40 ... 50<br>⩾ 56 | 950<br>1 120<br>1 400 | 1850 | ⩽ 160<br>⩾ 200 | 1 320<br>1 600 | 2 000 | – | – | – | ⩽ 40<br>⩾ 45 | 900<br>1 180 | 1 600 | ⩽ 125<br>160<br>⩾ 200 | 1 180<br>1 250<br>1 600 | 2 000 |

## 5.2 - Determining the gear reducer size

### Constant load

- Fill out the questionnaire for the selection on page 31; in particular, make available required output power $P_2$, the angular speeds $n_2$ and $n_1$, the running conditions (nature of load, frequency of starting h/d, frequency of starting $z$, other considerations) referring to ch. 3.
- Determine service factor $fs$ required on the basis of running conditions (ch. 3).
- Select the gear reducer size (also, the train of gears and transmission ratio $i$ at the same time) on the basis of $n_2$, $n_1$ and of a power $P_{N2}$ greater than or equal to $P_2 \cdot fs$ (ch. 7 and 9).
- Calculate power $P_1$ required at input side of gear reducer using the formula $P_2 / \eta$, where $\eta = 0{,}97 \div 0{,}94$ is the efficiency of gear reducer (ch. 6).

When for reasons of motor standardization, power $P_1$ applied at input side of gear reducer turns out to be higher than the power required (considering motor/gear reducer efficiency), it must be certain that this excess power applied will never be required, and frequency of starting z is so low as not to affect service factor (ch. 3).

Otherwise, make the selection by multiplying $P_{N2}$ by $P_1$ applied $P_1$ required.

Calculations can also be made on the basis of torque instead of power; this method is even preferable for low $n_2$ values.

### Variable load

- Fill out the questionnaire for the selection on page 31; in particular, make available the torque $M_2$ and the angular speed $n_2$ required at gear reducer output, the running conditions (nature of load, duration of running required, frequency of starting z, other considerations) referring to ch. 3.
- In presence of required torque $M_2$ and angular speed $n_2$ variable in time, according to a given load cycle, calculate the equivalent torque $M_{2eq}$ and angular speed $n_{2eq}$ with the following formulae:

5

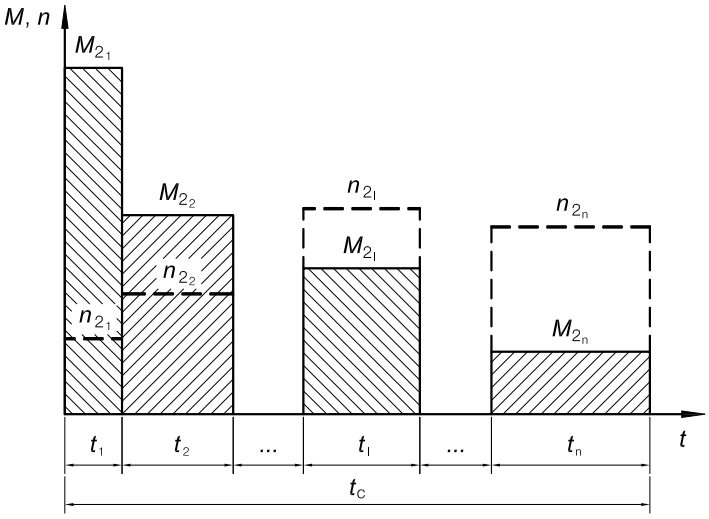


$$M_{2eq} = \sqrt[p]{\frac{M_{2_1}^p \cdot n_{2_1} \cdot t_1 + M_{2_2}^p \cdot n_{2_2} \cdot t_2 + \ldots + M_{2_i}^p \cdot n_{2_i} \cdot t_i + \ldots + M_{2_n}^p \cdot n_{2_n} \cdot t_n}{n_{2_{eq}} \cdot t_c}}$$

$$n_{2eq} = \frac{n_{2_1} \cdot t_1 + n_{2_2} \cdot t_2 + \ldots + n_{2_i} \cdot t_i + \ldots + n_{2_n} \cdot t_n}{t_c}$$

where:

| | |
|---|---|
| $M_{2eq}$ | [N m] is the equivalent torque of load cycle |
| $M_{2i}$ | [N m] is the torque required (constant) of load level i |
| $n_{2eq}$ | [min$^{-1}$] is the equivalent speed in the load cycle |
| $n_{2i}$ | [min$^{-1}$] is the low speed shaft speed (constant) of load level i |
| $t_i$ | [min] is the duration of interval i |
| $t_c$ | [min] is the total duration of cycle ($t_1 + \ldots + t_i + \ldots + t_n$) |
| p = 6,61 | for a running duration ≤ 8 h/d |
| p = 3,33 | for a running duration > 8 h/d |

2586-01.01

### 5.3 - Verifications

- Verify possible radial loads $F_{r1}$, $F_{r2}$ and axial loads $F_{a2}$ according to instructions and values given in ch. 11.
- When a load chart is available, and/or there are overloads – due to starting on full load (especially with high inertias and low transmission ratios), braking, shocks, gear reducers in which the low speed shaft becomes driving member due to driven machine inertia, or other static or dynamic causes - verify that the maximum torque peak (ch. 6) is always lower than $\boldsymbol{M}_{2max}$ (see ch. 7, 9), if higher or if it cannot be evaluated in the above cases, install a safety device so that $\boldsymbol{M}_{2max}$ **will bever be exceeded**.
- Verify that the input speed is lower than or equal to $n_{1max}$ (see ch. 5.1);
- Verify for each single interval *i* of the eventual load cycle that the required torque $M_{2i}$ is lower than $\boldsymbol{M}_{2max}$ and that input speed (relevant to output shaft speed $n_{2i}$) is $n_{1i} \leqslant n_{1max}$ (see ch. 5.1);
- Verify the possible need for forced cooling (ch. 4 and 12).
- For gear reducers with **backstop device**, having particular $i_N$ or low values of *f*s, verify load capacity of backstop device according to the values given in the table «Backstop device load capacity» (ch. 12).

### 5.4 - Selection questionnaire

Make available all data and information necessary for a correct gear reducer selection by filling out the questionnaire on next page.

Attach any technical specifications relevant to gear reducer, excluding data regarding the machine of the plant.

When possible, attach all possible drawings, pictures and/or any further information facilitating the technical and economic selection.

## 1 Application conditions

Application / Industry sector

Type of machine to be driven

☐ new machine
☐ existing machine, running gear reducer currently applied

Ambient temperature [°C]

| min | standard | max |
|---|---|---|
| | | |

Altitude [m above sea level]

Environment:
☐ normal (industrial) indoor
☐ normal (industrial) outdoor
☐ dusty
☐ corrosive / humid

Gear reducer position:
☐ small environment with limited air movement ($v_{air}$ < 0,63 m/s)
☐ wide environment with free air movement ($v_{air}$ ⩾ 1,25 m/s)
☐ open space, prot. against extremes of weather and solar radiance

## 2 Load data

Required output speed [min$^{-1}$]

| min | nominal | max |
|---|---|---|
| | | |

Torque required at low speed shaft [N m]

| min | nominal | max |
|---|---|---|
| | | |

Required output power [kW]

| min | nominal | max |
|---|---|---|
| | | |

Input speed (gear reducers) [min$^{-1}$]

| min | nominal | max |
|---|---|---|
| | | |

Nature of load:
☐ uniform
☐ moderate overloads
☐ heavy overloads

Frequency of starting [starts/h]

Machine moment of inertia [kg m$^2$]

| min | standard | max |
|---|---|---|
| | | |

Running time [h/d]

Total duration [h]

Duty cycle (S1 ... S10)

Load cycle attached
☐ yes
☐ no

## 3 Motor

Motor type:
☐ asynchronous three-phase (a.c.)
☐ asynchr.three-phase with inverter
☐ d.c. motor with relevant converter
☐ int. combust. motor (single-cylinder)
☐ int. combust. motor (multi-cylinder)

Power $P_1$ [kW]

| min | nominal | max |
|---|---|---|
| | | |

Nominal speed $n_1$ [min$^{-1}$]

| min | nominal | max |
|---|---|---|
| | | |

a.c. motor supply:

| voltage [V] | frequency [Hz] |
|---|---|
| | |

IEC motor size (a.c. motor)

Type of a.c. motor starting:
☐ direct
☐ Y / Δ
☐ soft starter / inverter

Electromagnetic motor
☐ parking brake
☐ work
☐ safety

Braking torque [N m]

Starting torque [N m]

Moment of inertia [kg m$^2$]

Electric motor design (a.c. and d.c.):
☐ with independent cooling fan
☐ with encoder:
☐ with tacho-generator

System of motor-gear reducer mounting:
☐ with coupling
☐ with trapezoidal belts

| section | No. | $d_m$ [mm] | $d_1$ [mm] |
|---|---|---|---|
| | | | |

☐ with timing belt

| section | No. | $d_m$ [mm] |
|---|---|---|
| | | |

Eventual limit to drive dimensions

## 4 Gear reducer

Mounting position

Direction of rotation of output shaft
☐ white arrow
☐ black arrow
☐ white and black arrow

Backstop device (if present)
☐ free rotation, white arrow
☐ free rotation, black arrow

Type of admitted cooling
☐ with fan
☐ with coil
☐ with internal exchanger
☐ with UR O/A unit
☐ with UR O/W unit

Type of machine coupling
☐ shaft mounting
☐ with fluid / flexible coupling
☐ with cardan joint
☐ with toothed belt drive

| pitch | $d_m$ | $d_1$ | φ |
|---|---|---|---|
| | | | |

☐ with chain

| pitch | No. | $z_2$ | $z_3$ | overhang [mm] | φ |
|---|---|---|---|---|---|
| | | | | | |

☐ straight tooth cylindrical gear

| pitch | No. | $z_2$ | $z_3$ | overhang [mm] | φ |
|---|---|---|---|---|---|
| | | | | | |

Eventual axial load $F_a$ [N]

← - - →

Eventual limit to drive dimensions

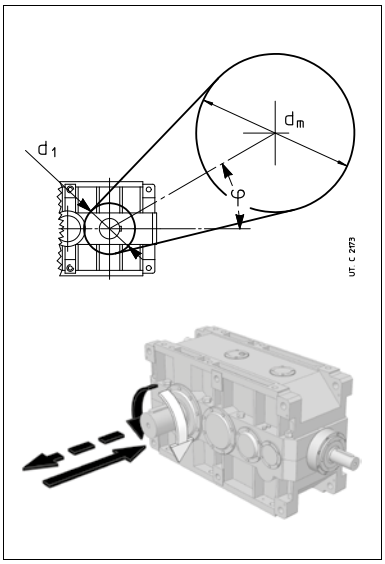

Page intentionally left blank

# 6 - Structural and operational details


Sound levels $L_{WA}$ and $L_{pA}$ ..... 34
Efficiency ..... 34
Overloads ..... 34
Moment of inertia (of mass) $J_1$ [kg m$^2$] ..... 35
High and low speed shaft end ..... 36
Plug dimensions ..... 36
Side-cover dimensions ..... 37
Direction of rotation ..... 37
Forced bearing and/or gear lubrication or with independent cooling unit ..... 38




2586-01.02

## Sound levels $L_{WA}$ and $L_{pA}$

Standard production sound power level $L_{WA}$ [dB(A)][1] and mean sound pressure level $L_{pA}$ [dB(A)][2] assuming nominal load, and input speed $n_1$ = 1 500[3] min$^{-1}$. Tolerance +3 dB(A).

If required, gear reducers can be supplied with reduced sound levels (normally 3 dB(A) less than tabulated values): consult us.

In case of gear reducers with fan cooling, add to the values in the table 3 dB(A) for 1 fan and 5 dB(A) for 2 fans.

| Size | Helical gear reducers | | | | | | | | | | | | Bevel helical gear reducers | | | | | | | | | | | |
|---|---|---|---|---|---|---|---|---|---|---|---|---|---|---|---|---|---|---|---|---|---|---|---|---|
| | R 2I | | | | R 3I | | | | R 4I | | | | R CI | | | | R C2I | | | | R C3I | |
| | $i_N \leqslant 12{,}5$ | | $i_N \geqslant 14$ | | $i_N \leqslant 63$ | | $i_N \geqslant 71$ | | $i_N \leqslant 160$ | | $i_N \geqslant 200$ | | $i_N \leqslant 16$ | | $i_N \geqslant 18$ | | $i_N \leqslant 63$ | | $i_N \geqslant 71$ | | | |
| | $L_{WA}$ | $L_{pA}$ | $L_{WA}$ | $L_{pA}$ | $L_{WA}$ | $L_{pA}$ | $L_{WA}$ | $L_{pA}$ | $L_{WA}$ | $L_{pA}$ | $L_{WA}$ | $L_{pA}$ | $L_{WA}$ | $L_{pA}$ | $L_{WA}$ | $L_{pA}$ | $L_{WA}$ | $L_{pA}$ | $L_{WA}$ | $L_{pA}$ | $L_{WA}$ | $L_{pA}$ |
| **4000 ... 4501** | **105** | 93 | **102** | 90 | **101** | 89 | **98** | 86 | **95** | 83 | **92** | 80 | **101** | 89 | **96** | 84 | **98** | 86 | **96** | 84 | **92** | 80 |
| **5000 ... 5601** | **–** | – | **106** | 94 | **105** | 93 | **102** | 90 | **99** | 87 | **96** | 84 | **–** | – | **–** | – | **101** | 89 | **99** | 87 | **96** | 84 |
| **6300, 6301** | **–** | – | **110** | 98 | **109** | 97 | **106** | 94 | **103** | 91 | **100** | 88 | **–** | – | **–** | – | **104** | 92 | **102** | 90 | **99** | 87 |
| **7101** | **–** | – | **112** | 100 | **111** | 99 | **108** | 96 | **105** | 93 | **102** | 90 | **–** | – | **–** | – | **106** | 94 | **104** | 92 | **102** | 90 |
| **8001** | **–** | – | **114** | 102 | **113** | 101 | **110** | 98 | **107** | 95 | **104** | 92 | **–** | – | **–** | – | **107** | 95 | **105** | 93 | **103** | 91 |

1) To ISO/CD 8579.
2) Mean value of measurement at 1 m from external profile of gear reducer standing in free field on a reflecting surface.
3) In the speed range $n_1$ 750 – 1 800 min$^{-1}$, sum to the table values: –3 dB(A) for 750 min$^{-1}$; –2 dB(A) for 1000 min$^{-1}$; –1 dB(A) for $n_1$ = 1 200 min$^{-1}$; +2 dB(A) for $n_1$ = 1 800 min$^{-1}$.

### Efficiency

The efficiency stated in the table is rough and referred to nominal running conditions (torque, speed, temperature); it is necessary to keep in mind that the efficiency value can diminish considerably for values of $M_2 << M_{N2}$.

6

| Nominal efficiency | Helical gear reducers | | | Bevel helical gear reducers | | |
|---|---|---|---|---|---|---|
| | R 2I | R 3I | R 4I | R CI | R C2I | R C3I |
| **η** | 0.970 | 0.955 | 0.940 | 0.970 | 0.955 | 0.940 |

### Overloads

When a gear reducer is subjected to high static and dynamic overloads, the need arises for verifying that such overloads will always remain lower than $M_{2max}$ (see ch. 7, 9).

Overloads are normally generated when one has:

– starting on full load (especially for high inertias and low transmission ratios), braking, shocks;
– gear reducers in which the low speed shaft becomes driving member due to driven machine inertia;
– applied power higher than that required; other static or dynamic causes.

The following general observations on overloads are accompanied by some formulae for carrying out evaluations in certain typical instances.

Where no evaluation is possible, install safety devices which will keep values within $M_{2max}$.

#### Starting torque

When starting on full load (especially for high inertias and low transmission ratios) verify that $M_{2max}$ is equal to or greater than starting torque, by using the following formula:

$$M_2 \text{ start} = \left( \frac{M \text{ start}}{M_N} \cdot M_2 \text{ available} - M_2 \text{ required} \right) \cdot \frac{J}{J + J_0} + M_2 \text{ required}$$

where:
$M$ start and $M_N$ are the starting torque and the motor nominal torque, respectively;
$M_2$ required is the torque absorbed by the machine through work and frictions;
$M_2$ available is the output torque due to motor nominal power;
$J_0$ is the moment of inertia (of mass) of the motor;
$J$ is the external moment of inertia (of mass) in kg m$^2$ (gear reducers, couplings, driven machine) referred to the motor shaft;
NOTE: when seeking to verify that starting torque is sufficiently high for starting, take into account starting friction, if any, in evaluating $M_2$ required.

**Stopping machines with high kinetic energy (high moments of inertia combined with high speeds) with brake motor**

$$\left( \frac{Mf}{\eta} \cdot i + M_2 \text{ required} \right) \cdot \frac{J}{J + J_0} - M_2 \text{ required} \leqslant M_{2max}$$

where:
$Mf$ is the braking torque applied on high speed shaft; for other symbols see above and ch. 1.

2586-01.02

**Moment of inertia** (of mass) $J_1$ [kg m²]

The moment of inertia is referred to the high speed shaft of gear reducer, design with only one single HSS and LSS end; the one referred to the low speed shaft is given by following ratio: $J_2 = J_1 \cdot i^2$.

| Train of gears | $i_N$ | Gear reducer size[1] Moment of inertia of mass $J_1$ [kg m²] | | | | | | | | | |
|---|---|---|---|---|---|---|---|---|---|---|---|
| | | **4000** | **4001** | **4500** | **4501** | **5000** | **5001** | **5600** | **5601** | **6300** | **6301** |
| **2I** | 10 | 0,713 | 0,732 | – | – | – | – | – | – | – | – |
| | 11,2 | 0,684 | 0,7 | 0,8 | 0,813 | – | – | – | – | – | – |
| | 12,5 | 0,467 | 0,478 | 0,757 | 0,769 | – | – | – | – | – | – |
| | 14 | 0,448 | 0,458 | 0,521 | 0,53 | 1,393 | 1,429 | 1,609 | 1,633 | 3,593 | 3,643 |
| | 16 | 0,431 | 0,44 | 0,495 | 0,502 | 1,333 | 1,363 | 1,522 | 1,543 | 3,412 | 3,428 |
| | 18 | 0,297 | 0,303 | 0,469 | 0,475 | 0,994 | 1,017 | 1,439 | 1,457 | 3,296 | 3,332 |
| | 20 | 0,286 | 0,291 | 0,45 | 0,455 | 0,956 | 0,975 | 1,39 | 1,406 | 2,39 | 2,4 |
| | 22,4 | 0,279 | 0,284 | 0,31 | 0,314 | 0,808 | 0,823 | 1,023 | 1,035 | 2,318 | 2,34 |
| **3I** | 25 | 0,21 | 0,213 | 0,298 | 0,301 | 0,79 | 0,803 | 0,862 | 0,871 | – | – |
| | 28 | 0,206 | 0,208 | 0,224 | 0,226 | 0,602 | 0,611 | 0,653 | 0,659 | 1,526 | 1,539 |
| | 31,5 | 0,202 | 0,204 | 0,217 | 0,219 | 0,588 | 0,595 | 0,633 | 0,638 | 1,476 | 1,481 |
| | 35,5 | 0,149 | 0,15 | 0,211 | 0,212 | 0,418 | 0,423 | 0,613 | 0,617 | 0,996 | 1,004 |
| | 40 | 0,146 | 0,147 | 0,156 | 0,157 | 0,409 | 0,413 | 0,601 | 0,605 | 0,966 | 0,969 |
| | 45 | 0,133 | 0,134 | 0,152 | 0,153 | 0,362 | 0,365 | 0,425 | 0,427 | 0,834 | 0,953 |
| | 50 | 0,131 | 0,132 | 0,137 | 0,138 | 0,356 | 0,359 | 0,374 | 0,376 | 0,816 | 0,818 |
| | 56 | 0,075 | 0,076 | 0,135 | 0,135 | 0,241 | 0,243 | 0,366 | 0,368 | 0,555 | 0,63 |
| | 63 | 0,074 | 0,075 | 0,078 | 0,079 | 0,237 | 0,239 | 0,249 | 0,25 | 0,543 | 0,544 |
| | 71 | 0,054 | 0,054 | 0,077 | 0,077 | 0,164 | 0,165 | 0,244 | 0,245 | 0,363 | 0,538 |
| | 80 | 0,053 | 0,053 | 0,056 | 0,056 | 0,162 | 0,163 | 0,169 | 0,17 | 0,356 | 0,357 |
| | 90 | 0,048 | 0,048 | 0,054 | 0,055 | 0,148 | 0,149 | 0,166 | 0,167 | 0,352 | 0,353 |
| | 100 | 0,047 | 0,047 | 0,054 | 0,054 | 0,147 | 0,148 | 0,164 | 0,165 | 0,317 | 0,317 |
| | 125 | – | – | 0,048 | 0,048 | – | – | – | – | – | – |
| **4I** | 125 | 0,044 | 0,044 | 0,045 | 0,045 | 0,128 | 0,129 | 0,131 | 0,131 | 0,275 | 0,276 |
| | 160 | 0,035 | 0,035 | 0,035 | 0,035 | 0,106 | 0,106 | 0,108 | 0,108 | 0,248 | 0,248 |
| | 200 | 0,021 | 0,021 | 0,022 | 0,022 | 0,05 | 0,05 | 0,051 | 0,051 | 0,112 | 0,112 |
| | 250 | 0,017 | 0,017 | 0,018 | 0,018 | 0,042 | 0,042 | 0,042 | 0,042 | 0,101 | 0,101 |
| | 315 | 0,015 | 0,015 | 0,017 | 0,017 | 0,036 | 0,036 | 0,042 | 0,042 | 0,084 | 0,084 |
| **CI** | 8 | 0,964 | 0,993 | 1,387 | – | – | – | – | – | – | – |
| | 9 | 0,916 | 0,943 | 1,284 | 1,309 | – | – | – | – | – | – |
| | 10 | 0,872 | 0,894 | 1,035 | 1,229 | – | – | – | – | – | – |
| | 11,2 | 0,845 | 0,866 | 0,969 | 0,985 | – | – | – | – | – | – |
| | 12,5 | 0,572 | 0,587 | 0,921 | 0,934 | – | – | – | – | – | – |
| | 14 | 0,556 | 0,569 | 0,634 | 0,644 | – | – | – | – | – | – |
| | 16 | 0,388 | 0,397 | 0,603 | 0,612 | – | – | – | – | – | – |
| | 18 | 0,378 | 0,386 | 0,426 | – | – | – | – | – | – | – |
| **C2I** | 20 | 0,398 | 0,403 | 0,408 | 0,413 | – | – | – | – | – | – |
| | 22,4 | 0,391 | 0,395 | 0,42 | 0,423 | 1,26 | 1,274 | – | – | – | – |
| | 25 | 0,384 | 0,388 | 0,409 | 0,412 | 1,236 | 1,248 | 1,311 | 1,319 | – | – |
| | 28 | 0,298 | 0,3 | 0,399 | 0,402 | 0,953 | 0,962 | 1,278 | 1,285 | 1,642 | 1,655 |
| | 31,5 | 0,293 | 0,296 | 0,31 | 0,311 | 0,938 | 0,946 | 0,986 | 0,992 | 1,597 | 1,601 |
| | 35,5 | 0,272 | 0,274 | 0,303 | 0,305 | 0,859 | 0,864 | 0,965 | 0,97 | 1,568 | 1,577 |
| | 40 | 0,269 | 0,271 | 0,279 | 0,281 | 0,849 | 0,854 | 0,879 | 0,883 | 1,169 | 1,172 |
| | 45 | 0,181 | 0,182 | 0,275 | 0,276 | 0,564 | 0,568 | 0,866 | 0,869 | 1,028 | 1,156 |
| | 50 | 0,179 | 0,18 | 0,186 | 0,186 | 0,558 | 0,561 | 0,577 | 0,579 | 1,01 | 1,012 |
| | 56 | 0,124 | 0,124 | 0,183 | 0,184 | 0,383 | 0,386 | 0,569 | 0,571 | 0,671 | 1,002 |
| | 63 | 0,122 | 0,123 | 0,126 | 0,127 | 0,38 | 0,381 | 0,391 | 0,393 | 0,66 | 0,661 |
| | 71 | 0,114 | 0,114 | 0,125 | 0,125 | 0,358 | 0,359 | 0,386 | 0,387 | 0,652 | 0,655 |
| | 80 | 0,113 | 0,114 | 0,124 | 0,124 | 0,356 | 0,357 | 0,383 | 0,384 | 0,443 | 0,443 |
| | 100 | 0,068 | 0,069 | 0,075 | 0,075 | 0,221 | 0,222 | 0,239 | 0,24 | 0,438 | 0,438 |
| | 125 | – | – | 0,069 | 0,069 | – | – | 0,223 | 0,223 | – | – |
| **C3I** | 125 | 0,051 | 0,052 | 0,052 | 0,053 | 0,163 | 0,163 | 0,166 | 0,166 | 0,319 | 0,319 |
| | 160 | 0,034 | 0,034 | 0,034 | 0,034 | 0,104 | 0,105 | 0,106 | 0,106 | 0,215 | 0,215 |
| | 200 | 0,027 | 0,027 | 0,027 | 0,027 | 0,087 | 0,087 | 0,088 | 0,088 | 0,137 | 0,169 |
| | 250 | 0,016 | 0,016 | 0,016 | 0,016 | 0,052 | 0,052 | 0,053 | 0,053 | 0,108 | 0,108 |
| | 315 | 0,013 | 0,013 | 0,013 | 0,013 | 0,044 | 0,044 | 0,045 | 0,045 | 0,065 | 0,065 |

1) For sizes 7101 and 8001, consult us.



2586-01.02

## High and low speed shaft end

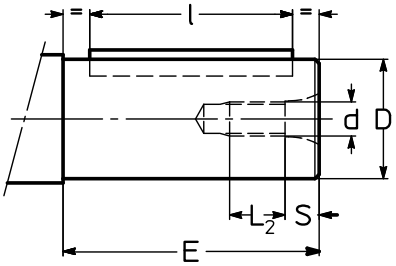


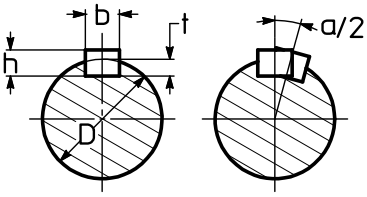


Gear reducer

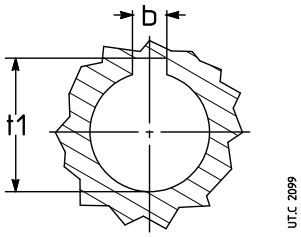


(Hollow) machine shaft

| Shaft end | | | | | | Key | | | | | Keyway | | |
|---|---|---|---|---|---|---|---|---|---|---|---|---|---|
| **D** Ø | **E** | **d** Ø | **S** | **$L_2$** | **$a/2_{max}$** arc min 1) | **b** h9 | × | **h** h11 | × | **l** | **b** h9 hub N9 shaft | **t** shaft | **$t_1$** shaft |
| **38** k6 | 80 | M10 | 7,6 | 18,4 | 3,27 | 10 | × | 8 | × | 70 | 10 | 5 | 41,3 |
| **48** k6 | 110 | M12 | 9,5 | 22,5 | 3,08 | 14 | × | 9 | × | 90 | 14 | 5,5 | 51,8 |
| **55** m6 | 110 | M12 | 9,5 | 22,5 | 2,75 | 16 | × | 10 | × | 90 | 16 | 6 | 59,3 |
| **60** m6 | 140 | M16 | 12,7 | 27,3 | 2,46 | 18 | × | 11 | × | 110 | 18 | 7 | 64,4 |
| **65** m6 | 140 | M16 | 12,7 | 27,3 | 2,33 | 18 | × | 11 | × | 110 | 18 | 7 | 69,4 |
| **70** m6 | 140 | M16 | 12,7 | 27,3 | 2,55 | 20 | × | 12 | × | 125 | 20 | 7,5 | 74,9 |
| **75** m6 | 140 | M16 | 12,7 | 27,3 | 2,38 | 20 | × | 12 | × | 125 | 20 | 7,5 | 79,9 |
| **80** m6 | 170 | M20 | 16 | 34 | 2,23 | 22 | × | 14 | × | 140 | 22 | 9 | 85,4 |
| **90** m6 | 170 | M20 | 16 | 34 | 1,99 | 25 | × | 14 | × | 140 | 25 | 9 | 95,4 |
| **100** m6 | 210 | M24 | 19 | 41 | 1,79 | 28 | × | 16 | × | 180 | 28 | 10 | 106,4 |
| **110** m6 | 210 | M24 | 19 | 41 | 1,63 | 28 | × | 16 | × | 180 | 28 | 10 | 116,4 |
| **120** m6 | 210 | M30 | 22 | 45 | 1,78 | B32 | × | 18 | × | 170 | 32 | 11 | 127,4 |
| **125** m6 | 210 | M30 | 22 | 45 | 1,71 | 32 | × | 18 | × | 180 | 32 | 11 | 132,4 |
| **140** m6 | 250 | M30 | 22 | 45 | 1,52 | 36 | × | 20 | × | 180 | 36 | 12 | 148,4 |
| **150** m6 | 245 | M36 | 27 | 54 | 1,42 | 36 | × | 20 | × | 220 | 36 | 12 | 158,4 |
| **150** m6 | 250 | M36 | 27 | 54 | 1,42 | B36 | × | 20 | × | 210 | 36 | 12 | 158,4 |
| **180** m6 | 300 | M36 | 27 | 54 | 1,18 | 45 | × | 25 | × | 250 | 45 | 15 | 190,4 |
| **190** m6 | 280 | M36 | 27 | 54 | 1,12 | B45 | × | 25 | × | 230 | 45 | 15 | 200,4 |
| **200** m6 | 280 | M36 | 27 | 54 | 1,07 | B45 | × | 25 | × | 230 | 45 | 15 | 210,4 |
| **200** m6 | 350 | M36 | 27 | 54 | 1,07 | 45 | × | 25 | × | 320 | 45 | 15 | 210,4 |
| **210** m6 | 300 | M36 | 27 | 54 | 1,02 | B50 | × | 28 | × | 250 | 50 | 17 | 221,4 |
| **220** m6 | 300 | M36 | 27 | 54 | 0,97 | B50 | × | 28 | × | 250 | 50 | 17 | 231,4 |
| **240** m6 | 330 | M45 | 33 | 67 | 1,06 | B56 | × | 32 | × | 270 | 56 | 20 | 252,4 |
| **250** m6 | 330 | M45 | 33 | 67 | 1,02 | B56 | × | 32 | × | 270 | 56 | 20 | 262,4 |
| **270** m6 | 380 | M45 | 33 | 67 | 0,94 | B63 | × | 32 | × | 320 | 63 | 20 | 282,4 |
| **280** m6 | 380 | M45 | 33 | 67 | 0,91 | B63 | × | 32 | × | 320 | 63 | 20 | 292,4 |
| **300** m6 | 430 | M45 | 33 | 67 | 0,85 | B70 | × | 36 | × | 355 | 70 | 22 | 314,4 |
| **320** m6 | 430 | M45 | 33 | 67 | 0,80 | B70 | × | 36 | × | 355 | 70 | 22 | 334,4 |
| **360** m6 | 590 | M45 | 33 | 67 | 1,45 | B80 | × | 40 | × | 550 | 90 | 25 | 375,4 |
| **400** m6 | 660 | M45 | 33 | 67 | 1,50 | B90 | × | 45 | × | 610 | 90 | 28 | 417,4 |

1) Maximum angular disalignment of keyways on double extension shafts.

### Plug dimensions

The filler, drain and level plugs have standard threading G 1″ for size ⩽ 6301, G 1″¼ for size 7101, G 1″½ for size 8001.

### Side-cover dimensions

The low speed shaft covers are machined for spigot. For cover height, consider the difference **C** – **H**$_1$ (ch. 8 and 10); for trains of gears CI and C2I the cover dimensions on bevel wheel side are stated in the table. Diameter tolerance ± 0,5 (excluding **d** dimension).

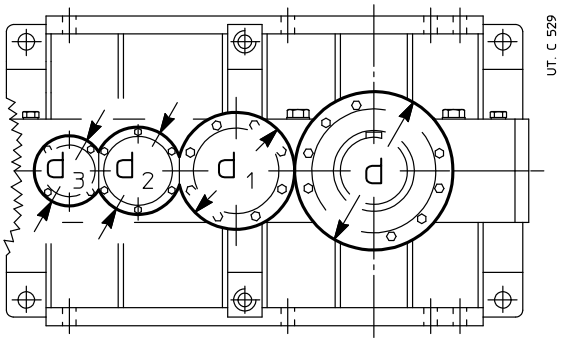


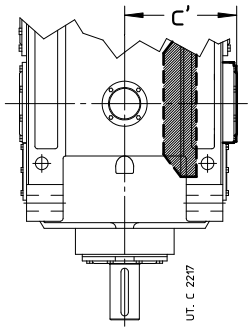


| Grandezza | Rotismo | | | | | | | | | |
|---|---|---|---|---|---|---|---|---|---|---|
| | **2I** | | | | **3I, 4I, C2I, C3I** | | | **2I, 3I, 4I, CI C2I, C3I** | | |
| | **d**$_3$ Ø | | **d**$_2$ Ø | | **d**$_3$ Ø | **d**$_2$ Ø | **c'** (C2I) | **d**$_1$ Ø | **c'** (CI) | **d** Ø h7 |
| **4000, 4001** | $i_N \leq 11,2$ 170 | $i_N \geq 12,5$ 190 | $i_N \leq 11,2$ 259 | $i_N \geq 12,5$ 248 | 190 | 248 | 318 | 340 | 363[1)] | 432 |
| **4500, 4501** | $i_N \leq 12,5$ 170 | $i_N \geq 14$ 190 | $i_N \leq 12,5$ 259 | $i_N \geq 14$ 248 | 190 | 248 | 318 | 340 | 363[1)] | 472 |
| **5000, 5001** | 228 | | 320 | | 228 | 320 | 423[1)] | 388 | – | 530 |
| **5600, 5601** | 228 | | 320 | | 228 | 320 | 423 | 432 | – | 590 |
| **6300, 6301** | 248 | | 362 | | 248 | 362 | 468 | 510 | – | 648 |
| **7101** | 320 | | 490 | | 320 | 490 | 518 | 648 | – | 782[2)] |
| **8001** | 388 | | 550 | | 388 | 550 | 580 | 782 | – | 889[2)] |

1) Overhanging from **C** dimension (see ch. 10.1 and 10.2).
2) For hollow low speed shaf: 842 (size 7101), 969 (size 8001).

## Direction of rotation

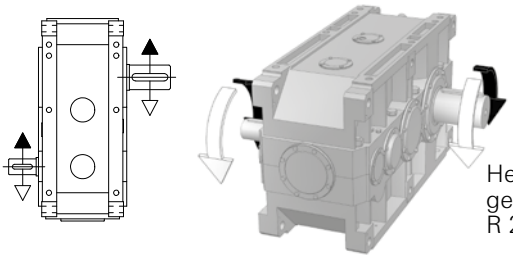

Helical gear reducer: R 2I ... UP1A

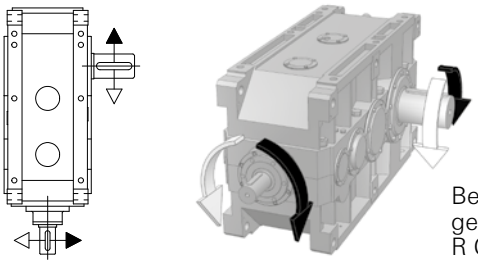

Bevel helical gear reducer: R C2I ... UO1A

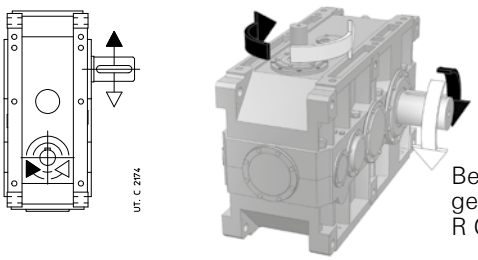


Bevel helical gear reducer: R C2I ... UO1V

The correspondence between gear reducer high speed shaft and low speed shaft direction of rotation is given at ch. 8 and 10 and it is according to design and train of gears. For the arrows' meaning interpretation refer to the examples on the left.

### Forced lubrication of bearings and/or gears with motor pump: hydraulic circuit diagram

The bearings and/or the gears to be forced lubricated are determined by Rossi according to gear reducer and application.

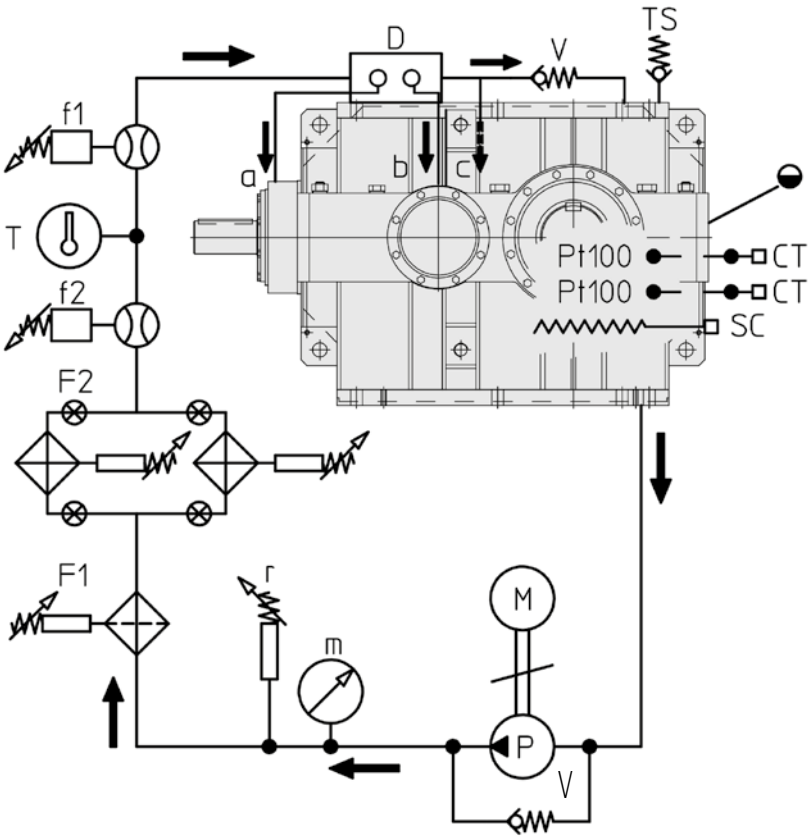


**As standard**

| | |
|---|---|
| **a, b, c** | Gear pair/bearing pipes |
| **m** | Pressure gauge (0 – 16 bar) |
| **M** | Motor pump (1,5 kW, 230.400 V 50 Hz) |
| **P** | Pump (30 dm³/min) |
| **T** | Thermometer 0 – 120 °C |
| **V** | Safety valve |
| **r** | Minimum pressure gauge |
| **TS** | Filler plug |
| **D** | Flow rate |
| ◒ | Oil level (approx.) |

**On request**

| | |
|---|---|
| **Pt100*** | Oil temperature probe (separate)* |
| **f1** | Electric flow switch: vertical mounting |
| **f2** | Visible flow switch |
| **F1** | Filter |
| **F2** | Exchange filter |
| **CT03N*, CT10N*** | Control devices with 2 and 3 thresholds (separately supplied); supply 230 V 50 Hz* |
| **SC*** | Oil heater* |

* On request, but necessary for gear reducer starting at $T_{ambient}$ ( = $T_{oil}$) ≤ 25 °C: pre-heat the oil with the heater.

### Starting at low temperature ($T_{oil}$ = $T_{ambient}$ ⩽ 25 °C) of gear reducer with forced lubrication

**Always foresee oil heater and 2-threshold signalling device CT03N + Pt100 and 3-threshold signalling device CT10N + Pt100..**

- **CT03N** (2-threshold device) and relevant temperature probe Pt100, to pilot the heater; set the operating threshold at 50 °C (stopping the heater supply) and the reset threshold at 30 °C.
- **CT10N** (3-threshold device) and relevant temperature probe Pt100 to start the motor pump and the motor of gear reducer; it is advised to delay the starting of gear reducer motor by at least 1 min from the motor pump starting so that oil is already circulating: the motor pump must run simultaneously with gear reducer; set the operating threshold at 30 °C to start the gear reducer and the motor pump, the reset threshold at 10 °C and the safety threshold at 90 °C.

For starting at $T_{oil}$ (= $T_{ambient}$) ⩽ 0 °C it is necessary to adjust the calibration of devices CT03N and CT10N according to real ambient temperature (see also point B1 in the table at ch. 12 (8)).

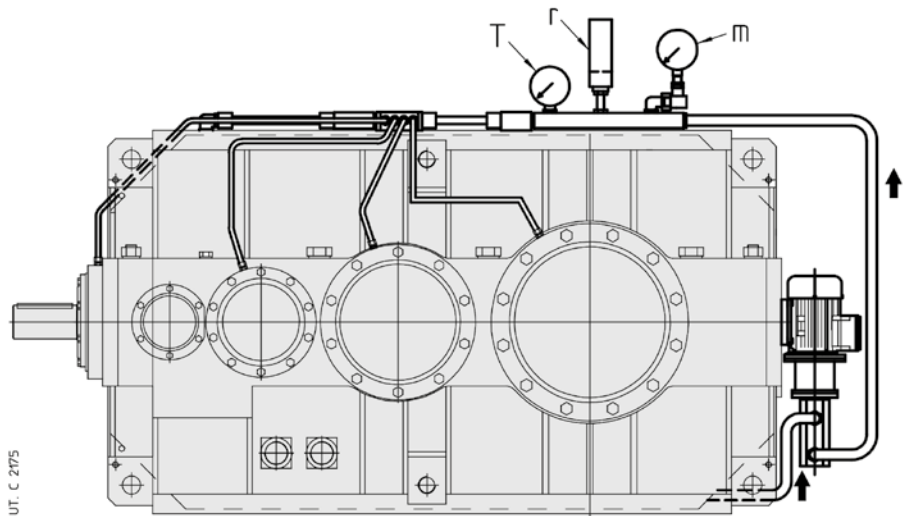


**Example of forced lubrication with motor pump**; the exact position of motor pump depends on the gear reducer size, train of gears, mounting position and available dimensions: for this reason, on request, a drawing of the specific solution will be supplied; pipes are usually realized with suction and delivery flexible pipes and with rigid pipes between the flow rate and the bearings.

**Bearing and/or gear pair forced lubrication with oil/air or oil/water independent cooling unit: hydraulic circuit diagram**

The bearings and/or the gears to be forced lubricated are determined by Rossi according to gear reducer and application.

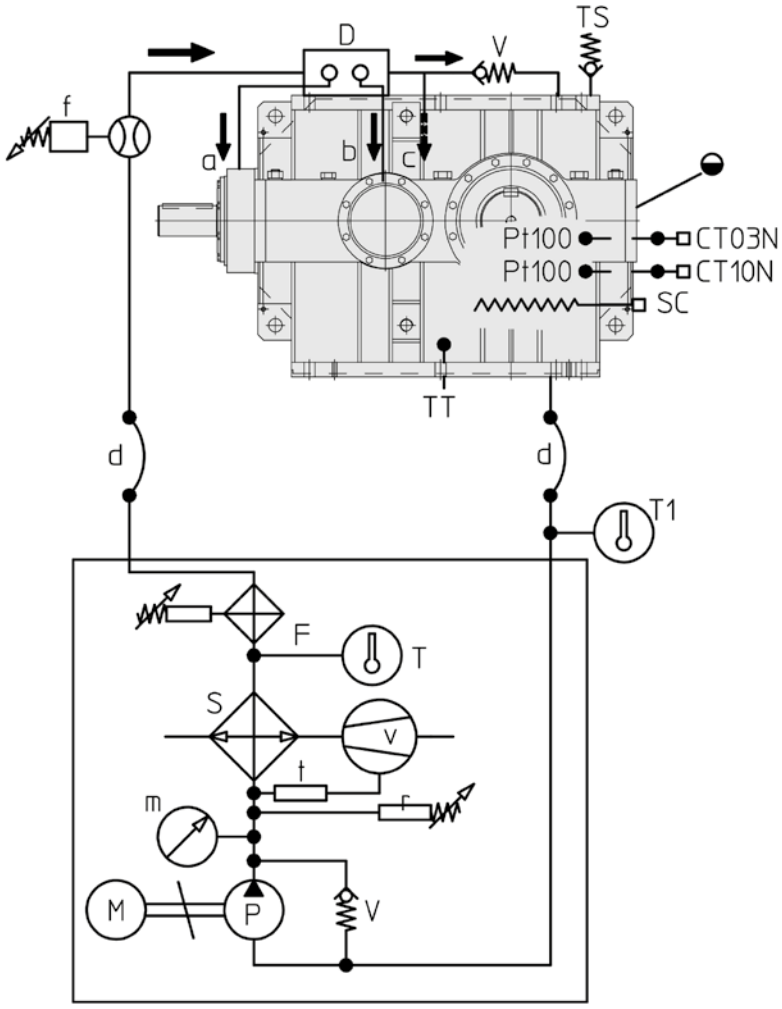


### As standard

| | |
|---|---|
| **a, b, c** | Gear pair/bearing pipes |
| **d** | Flexible connection (by Customer) |
| **m** | Pressure gauge (0 – 16 bar) |
| **M** | Motor pump (ch. 12 (10)) |
| **P** | Pump (ch. 12 (10)) |
| **S** | Oil/air or oil/water exchanger |
| **v** | Motor fan (UR O/A) |
| **t** | Fan thermostat 0 ÷ 90 °C (UR O/A) |
| **T** | Thermometer 0 – 120 °C |
| **V** | Safety valve |
| **r** | Minimum pressure gauge |
| **TS** | Filler plug |
| **D** | Flow rate |
| ◒ | Approx. oil level |

### On request

| | |
|---|---|
| **Pt100*** | Oil temperature probe (loose)* |
| **f** | Flow switch (loose) |
| **F** | Filter with electric blockage warning (with UR O/A it is supplied loose) |
| **CT03N*, CT10N*** | Control devices with 2 and 3 thresholds (separately supplied); supply 230 V 50 Hz* |
| **T1** | Thermometer 0 – 120 °C |
| **TT** | Bi-metal type thermostat |
| **SC*** | Oil heater* |

* On request, but necessary for gear reducer starting at $T_{ambient}$ (= $T_{oil}$) ≤ 25 °C: pre-heat the oil with the heater.

6

For **starting at low temperature**: see previous page.

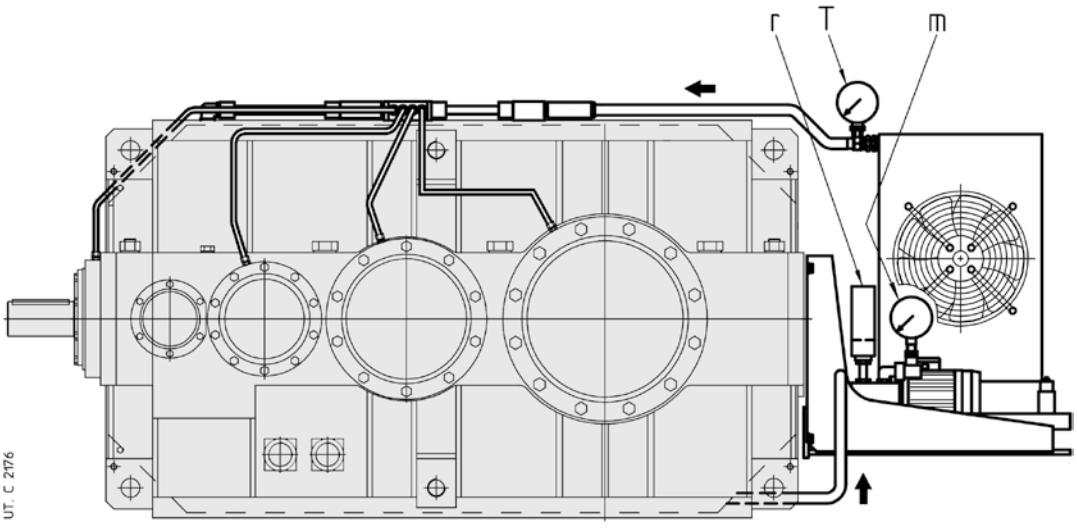


**Example of forced lubrication with cooling unit**: the exact position of cooling unit depends on the gear reducer size, on train of gears, mounting position and available dimensions: for this reason, on request, a drawing of specific solution is supplied; the pipes are usually realized with suction/ delivery flexible pipes and with rigid pipes between the flow rate and the bearings.

2586-01.02

Page intentionally left blank

# 7 - Selection tables
(helical gear reducers)



2586-01.02

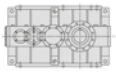

## $n_1$ = 1 800 min$^{-1}$

| Train of gears | $i_N$ | $n_{N2}$ min$^{-1}$ | Gear reducer size<br>$P_{N2}$ [kW]<br>$M_{N2}$ ($M_{2max}$) [kN m] | | | | | | | | | | | |
|---|---|---|---|---|---|---|---|---|---|---|---|---|---|---|
| | | | **4000** | **4001** | **4500** | **4501** | **5000** | **5001** | **5600** | **5601** | **6300** | **6301** | **7101** | **8001** |
| 2I | **10** | 180 | 1820▲<br>**95** (155) | 2000▲<br>**105** (180) | – | – | – | – | – | – | – | – | – | – |
| | **11,2** | 160 | 1600▲<br>**95** (155) | 1780▲<br>**106** (180) | 1890▲<br>**114** (212) | 2040▲<br>**123** (243) | – | – | – | – | – | – | – | – |
| | **12,5** | 140 | 1440▲<br>**95** (160) | 1610▲<br>**106** (180) | 1690▲<br>**116** (212) | 1790▲<br>**122** (243) | – | – | – | – | – | – | – | – |
| | **14** | 132 | 1270▲<br>**95** (160) | 1420▲<br>**106** (180) | 1550▲<br>**118** (218) | 1710▲<br>**130** (243) | 2150▲<br>**160** (315) | 2420▲<br>**180** (365) | 2970▲<br>**224** (425) | 3360▲<br>**253** (487) | 4410▲<br>**335** (600) | 4820▲<br>**366** (710) | – | – |
| | **16** | 112 | 1100▲<br>**95** (155) | 1180▲<br>**102** (175) | 1370▲<br>**118** (218) | 1510▲<br>**130** (250) | 1880▲<br>**160** (307) | 2080▲<br>**177** (355) | 2640▲<br>**224** (425) | 3010▲<br>**255** (500) | 3830▲<br>**335** (600) | 4210▲<br>**375** (710) | – | – |
| | **18** | 100 | 1010▲<br>**95** (155) | 1130▲<br>**106** (180) | 1180▲<br>**117** (206) | 1250▲<br>**124** (236) | 1720▲<br>**160** (307) | 1940▲<br>**180** (355) | 2310▲<br>**224** (412) | 2570▲<br>**249** (462) | 3460▲<br>**335** (580) | 3840▲<br>**373** (670) | – | – |
| | **20** | 90 | 881▲<br>**95** (155) | 980▲<br>**106** (180) | 1080▲<br>**118** (218) | 1210▲<br>**132** (250) | 1510▲<br>**160** (307) | 1700▲<br>**180** (355) | 2110▲<br>**224** (437) | 2420▲<br>**257** (500) | 3020▲<br>**335** (615) | 3330▲<br>**375** (710) | – | – |
| | **22,4** | 80 | 796▲<br>**95** (145) | 888▲<br>**106** (170) | 953▲<br>**118** (206) | 1040▲<br>**128** (236) | 1340▲<br>**160** (315) | 1510▲<br>**180** (365) | 1850▲<br>**224** (412) | 2120▲<br>**257** (475) | 2730▲<br>**335** (580) | 3050▲<br>**375** (670) | – | – |
| 3I | **25** | 71 | 711<br>**95** (170) | 753<br>**101** (195) | 865▲<br>**118** (190) | 968▲<br>**132** (218) | 1220▲<br>**160** (300) | 1370▲<br>**180** (345) | 1650▲<br>**224** (412) | 1890▲<br>**257** (487) | – | – | 3390▲<br>**462** (925) | – |
| | **28** | 63 | 658<br>**100** (170) | 704<br>**107** (195) | 746<br>**115** (218) | 803<br>**124** (250) | 1250▲<br>**190** (335) | 1380▲<br>**210** (387) | 1470▲<br>**227** (450) | 1590▲<br>**245** (487) | 2200▲<br>**320** (630) | 2540▲<br>**371** (750) | 3390▲<br>**497** (1000) | – |
| | **31,5** | 56 | 571<br>**100** (170) | 639<br>**112** (195) | 698<br>**122** (230) | 748<br>**131** (265) | 1090▲<br>**190** (325) | 1220▲<br>**212** (375) | 1380▲<br>**241** (450) | 1510▲<br>**262** (530) | 1910▲<br>**320** (630) | 2170▲<br>**371** (750) | 3390▲<br>**575** (1150) | – |
| | **35,5** | 50 | 525<br>**100** (170) | 577<br>**110** (195) | 622<br>**125** (230) | 663<br>**133** (257) | 991<br>**190** (335) | 1110<br>**212** (375) | 1230▲<br>**243** (425) | 1380▲<br>**274** (500) | 1750▲<br>**327** (650) | 2020▲<br>**378** (750) | 3370▲<br>**630** (1120) | – |
| | **40** | 45 | 456<br>**100** (165) | 511<br>**112** (190) | 571<br>**125** (230) | 609<br>**133** (265) | 867<br>**190** (335) | 968<br>**212** (375) | 1120▲<br>**243** (462) | 1290▲<br>**280** (530) | 1520▲<br>**327** (650) | 1730▲<br>**378** (750) | 2920▲<br>**630** (1180) | – |
| | **45** | 40 | 417<br>**100** (170) | 467<br>**112** (195) | 497<br>**125** (218) | 556<br>**140** (250) | 787<br>**190** (335) | 878<br>**212** (387) | 972<br>**243** (437) | 1120<br>**280** (500) | 1380▲<br>**333** (670) | 1620▲<br>**386** (775) | 2570▲<br>**625** (1220) | – |
| | **50** | 35,5 | 362<br>**100** (170) | 406<br>**112** (195) | 453<br>**125** (236) | 508<br>**140** (272) | 689<br>**190** (335) | 768<br>**212** (387) | 881<br>**243** (475) | 1010<br>**280** (545) | 1270▲<br>**352** (670) | 1370▲<br>**386** (775) | 2250▲<br>**630** (1220) | – |
| | **56** | 31,5 | 328<br>**100** (170) | 368<br>**112** (195) | 394<br>**125** (224) | 442<br>**140** (257) | 639<br>**190** (345) | 714<br>**212** (387) | 772<br>**243** (450) | 890<br>**280** (515) | 1170<br>**354** (670) | 1310<br>**394** (775) | 2100▲<br>**630** (1250) | 2870▲<br>**900** (1750) |
| | **63** | 28 | 285<br>**100** (170) | 319<br>**112** (195) | 357<br>**125** (243) | 400<br>**140** (272) | 560<br>**190** (345) | 624<br>**212** (387) | 716<br>**243** (475) | 825<br>**280** (545) | 1020<br>**355** (670) | 1160<br>**412** (775) | 1820▲<br>**630** (1250) | 2490▲<br>**900** (1750) |
| | **71** | 25 | 267<br>**100** (175) | 299<br>**112** (200) | 310<br>**125** (224) | 348<br>**140** (257) | 504<br>**190** (355) | 562<br>**212** (400) | 627<br>**243** (450) | 723<br>**280** (515) | 935<br>**355** (690) | 1060<br>**412** (800) | 1660▲<br>**630** (1250) | 2260▲<br>**900** (1800) |
| | **80** | 22,4 | 232<br>**100** (175) | 260<br>**112** (200) | 290<br>**125** (243) | 325<br>**140** (280) | 441<br>**190** (355) | 492<br>**212** (400) | 564<br>**243** (487) | 650<br>**280** (560) | 812<br>**355** (690) | 926<br>**412** (800) | 1440▲<br>**630** (1250) | 1970▲<br>**900** (1800) |
| | **90** | 20 | 214<br>**100** (175) | 239<br>**112** (200) | 252<br>**125** (230) | 283<br>**140** (265) | 403<br>**190** (355) | 450<br>**212** (400) | 494<br>**243** (462) | 570<br>**280** (530) | 733<br>**355** (650) | 850<br>**412** (750) | 1330▲<br>**630** (1250) | 1860▲<br>**900** (1800) |
| | **100** | 18 | 185<br>**100** (175) | 208<br>**112** (200) | 229<br>**125** (243) | 257<br>**140** (280) | 353<br>**190** (355) | 394<br>**212** (400) | 451<br>**243** (487) | 520<br>**280** (545) | 641<br>**355** (690) | 731<br>**412** (800) | 1150▲<br>**630** (1250) | 1620▲<br>**900** (1800) |
| | **125** | 14 | – | – | 183<br>**125** (212) | 205<br>**140** (243) | – | – | 361<br>**243** (425) | 416<br>**280** (487) | – | – | – | – |
| 4I | **125** | 14 | 142<br>**95** (180) | 159<br>**106** (206) | 185<br>**125** (250) | 212<br>**143** (290) | 278<br>**190** (365) | 301<br>**206** (412) | 350<br>**243** (487) | 399<br>**277** (560) | 486<br>**345** (690) | 554<br>**400** (800) | 899▲<br>**650** (1250) | 1350▲<br>**925** (1800) |
| | **160** | 11,2 | 118<br>**100** (180) | 132<br>**112** (206) | 146<br>**125** (250) | 168<br>**145** (290) | 226<br>**190** (365) | 248<br>**209** (412) | 285<br>**243** (487) | 326<br>**278** (560) | 396<br>**353** (690) | 440<br>**400** (800) | 730▲<br>**650** (1250) | 1050▲<br>**925** (1800) |
| | **200** | 9 | 98,6<br>**100** (180) | 110<br>**112** (206) | 122<br>**125** (250) | 141<br>**145** (290) | 169<br>**190** (365) | 188<br>**212** (412) | 213<br>**243** (487) | 244<br>**278** (560) | 301<br>**345** (690) | 342<br>**400** (800) | 579<br>**650** (1250) | 813▲<br>**925** (1800) |
| | **250** | 7,1 | 77,6<br>**100** (180) | 86,9<br>**112** (206) | 95,7<br>**125** (250) | 111<br>**145** (290) | 137<br>**190** (365) | 153<br>**212** (412) | 173<br>**243** (487) | 198<br>**278** (560) | 246<br>**355** (690) | 280<br>**412** (800) | 471<br>**650** (1250) | 630▲<br>**925** (1800) |
| | **315** | 5,6 | 63,1<br>**100** (180) | 70,7<br>**112** (206) | 73,4<br>**125** (230) | 85,1<br>**145** (265) | 108<br>**190** (365) | 120<br>**212** (412) | 134<br>**243** (462) | 155<br>**280** (530) | 197<br>**355** (690) | 224<br>**412** (800) | 371<br>**650** (1250) | 497▲<br>**925** (1800) |

▲ Necessary forced lubrication with motor pump and possible heat exchanger (see ch. 6 and 12).



2586-01.02

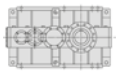

## $n_1$ = 1 500 min$^{-1}$

| Train of gears | $i_N$ | $n_{N2}$ min$^{-1}$ | Gear reducer size<br>$P_{N2}$ [kW]<br>$M_{N2}$ ($M_{2max}$) [kN m] | | | | | | | | | | | |
|---|---|---|---|---|---|---|---|---|---|---|---|---|---|---|
| | | | **4000** | **4001** | **4500** | **4501** | **5000** | **5001** | **5600** | **5601** | **6300** | **6301** | **7101** | **8001** |
| 2I | **10** | 150 | 1590<br>**100** (160) | 1780<br>**112** (180) | – | – | – | – | – | – | – | – | – | – |
| | **11,2** | 132 | 1400<br>**100** (160) | 1570<br>**112** (180) | 1700<br>**123** (218) | 1800<br>**130** (250) | – | – | – | – | – | – | – | – |
| | **12,5** | 118 | 1260<br>**100** (160) | 1420<br>**112** (185) | 1520<br>**125** (218) | 1610<br>**132** (250) | – | – | – | – | – | – | – | – |
| | **14** | 106 | 1110<br>**100** (160) | 1250<br>**112** (185) | 1370<br>**125** (218) | 1480<br>**135** (250) | 1910▲<br>**170** (325) | 2120▲<br>**189** (375) | 2690▲<br>**243** (437) | 3010▲<br>**272** (500) | 3900▲<br>**355** (615) | 4300▲<br>**392** (710) | – | – |
| | **16** | 95 | 966<br>**100** (155) | 1060<br>**110** (180) | 1210<br>**125** (218) | 1350<br>**140** (250) | 1670▲<br>**170** (315) | 1820▲<br>**185** (365) | 2390▲<br>**243** (437) | 2670▲<br>**272** (500) | 3380▲<br>**355** (615) | 3740▲<br>**400** (710) | – | – |
| | **18** | 85 | 890<br>**100** (160) | 997<br>**112** (185) | 1050<br>**125** (206) | 1120<br>**133** (236) | 1530▲<br>**170** (315) | 1710▲<br>**190** (365) | 2090▲<br>**243** (412) | 2310▲<br>**268** (475) | 3050▲<br>**355** (580) | 3440▲<br>**400** (670) | – | – |
| | **20** | 75 | 772<br>**100** (160) | 865<br>**112** (185) | 954<br>**125** (224) | 1070<br>**140** (257) | 1340▲<br>**170** (315) | 1490▲<br>**190** (365) | 1910▲<br>**243** (450) | 2140▲<br>**272** (515) | 2670▲<br>**355** (630) | 2960▲<br>**400** (730) | – | – |
| | **22,4** | 67 | 698<br>**100** (150) | 782<br>**112** (175) | 841<br>**125** (212) | 930<br>**138** (243) | 1190▲<br>**170** (325) | 1330▲<br>**190** (375) | 1670▲<br>**243** (425) | 1870▲<br>**272** (487) | 2410▲<br>**355** (600) | 2710▲<br>**400** (690) | – | – |
| 3I | **25** | 60 | 624<br>**100** (170) | 676<br>**109** (195) | 764<br>**125** (195) | 855<br>**140** (224) | 1080▲<br>**170** (300) | 1210▲<br>**190** (355) | 1490▲<br>**243** (425) | 1660▲<br>**272** (487) | – | – | 3040▲<br>**498** (1000) | 5860▲<br>**950** (1700) |
| | **28** | 53 | 581<br>**106** (170) | 624<br>**114** (195) | 646<br>**120** (224) | 679<br>**126** (250) | 1100<br>**200** (345) | 1180<br>**216** (387) | 1250<br>**232** (462) | 1340<br>**249** (500) | 1870▲<br>**327** (650) | 2160▲<br>**379** (750) | 3040▲<br>**535** (1060) | 5170▲<br>**950** (1700) |
| | **31,5** | 47,5 | 504<br>**106** (175) | 561<br>**118** (200) | 600<br>**126** (230) | 657<br>**138** (265) | 959<br>**200** (335) | 1070<br>**224** (387) | 1190<br>**249** (462) | 1280<br>**267** (530) | 1620▲<br>**327** (650) | 1850▲<br>**379** (750) | 3040▲<br>**620** (1180) | 4490▲<br>**950** (1700) |
| | **35,5** | 42,5 | 464<br>**106** (175) | 517<br>**118** (200) | 547<br>**132** (236) | 596<br>**144** (257) | 869<br>**200** (335) | 974<br>**224** (387) | 1080<br>**257** (437) | 1200<br>**286** (500) | 1490<br>**333** (670) | 1720<br>**386** (775) | 2980▲<br>**670** (1150) | 4060▲<br>**950** (1600) |
| | **40** | 37,5 | 403<br>**106** (170) | 448<br>**118** (195) | 503<br>**132** (236) | 548<br>**144** (272) | 761<br>**200** (335) | 852<br>**224** (387) | 986<br>**257** (475) | 1110<br>**290** (545) | 1290<br>**333** (670) | 1470<br>**386** (775) | 2590▲<br>**670** (1220) | 3530▲<br>**950** (1750) |
| | **45** | 33,5 | 369<br>**106** (170) | 410<br>**118** (195) | 437<br>**132** (224) | 497<br>**150** (257) | 690<br>**200** (345) | 773<br>**224** (400) | 857<br>**257** (450) | 955<br>**286** (515) | 1170<br>**340** (690) | 1380<br>**394** (800) | 2290▲<br>**670** (1250) | 3260▲<br>**950** (1750) |
| | **50** | 30 | 320<br>**106** (170) | 356<br>**118** (195) | 399<br>**132** (243) | 453<br>**150** (280) | 604<br>**200** (345) | 677<br>**224** (400) | 776<br>**257** (475) | 873<br>**289** (560) | 1100<br>**365** (690) | 1160<br>**394** (800) | 1990▲<br>**670** (1250) | 2830▲<br>**950** (1750) |
| | **56** | 26,5 | 290<br>**106** (175) | 323<br>**118** (200) | 347<br>**132** (224) | 394<br>**150** (257) | 561<br>**200** (355) | 628<br>**224** (400) | 681<br>**257** (450) | 760<br>**287** (530) | 1000<br>**365** (690) | 1110<br>**399** (800) | 1860<br>**670** (1250) | 2520▲<br>**950** (1800) |
| | **63** | 23,6 | 252<br>**106** (175) | 280<br>**118** (200) | 314<br>**132** (243) | 357<br>**150** (280) | 491<br>**200** (355) | 550<br>**224** (400) | 631<br>**257** (487) | 712<br>**290** (560) | 870<br>**365** (690) | 995<br>**425** (800) | 1620<br>**670** (1250) | 2190▲<br>**950** (1800) |
| | **71** | 21,2 | 236<br>**106** (175) | 263<br>**118** (200) | 273<br>**132** (230) | 310<br>**150** (265) | 442<br>**200** (355) | 495<br>**224** (400) | 553<br>**257** (462) | 619<br>**288** (530) | 801<br>**365** (690) | 914<br>**425** (800) | 1470<br>**670** (1250) | 1990▲<br>**950** (1800) |
| | **80** | 19 | 205<br>**106** (175) | 228<br>**118** (200) | 255<br>**132** (243) | 290<br>**150** (280) | 387<br>**200** (355) | 433<br>**224** (400) | 497<br>**257** (487) | 561<br>**290** (560) | 696<br>**365** (690) | 796<br>**425** (800) | 1280<br>**670** (1250) | 1730▲<br>**950** (1800) |
| | **90** | 17 | 189<br>**106** (175) | 210<br>**118** (200) | 222<br>**132** (230) | 252<br>**150** (265) | 354<br>**200** (355) | 396<br>**224** (400) | 436<br>**257** (462) | 489<br>**288** (530) | 628<br>**365** (650) | 731<br>**425** (750) | 1180<br>**670** (1250) | 1640▲<br>**950** (1800) |
| | **100** | 15 | 164<br>**106** (175) | 182<br>**118** (200) | 202<br>**132** (243) | 229<br>**150** (280) | 309<br>**200** (355) | 347<br>**224** (400) | 398<br>**257** (487) | 449<br>**290** (560) | 549<br>**365** (690) | 628<br>**425** (800) | 1020<br>**670** (1250) | 1420▲<br>**950** (1800) |
| | **125** | 11,8 | – | – | 161<br>**132** (212) | 183<br>**150** (243) | – | – | 318<br>**257** (425) | 359<br>**290** (487) | – | – | – | – |
| 4I | **125** | 11,8 | 122<br>**98** (180) | 136<br>**109** (206) | 154<br>**125** (250) | 178<br>**145** (290) | 244<br>**200** (365) | 263<br>**216** (412) | 292<br>**243** (487) | 334<br>**278** (560) | 407<br>**347** (690) | 461<br>**400** (800) | 772<br>**670** (1250) | 1160▲<br>**950** (1800) |
| | **160** | 9,5 | 104<br>**106** (180) | 116<br>**118** (206) | 128<br>**132** (250) | 140<br>**145** (290) | 198<br>**200** (365) | 222<br>**224** (412) | 244<br>**250** (487) | 272<br>**278** (560) | 340<br>**365** (690) | 366<br>**400** (800) | 627<br>**670** (1250) | 896▲<br>**950** (1800) |
| | **200** | 7,5 | 87,1<br>**106** (180) | 97<br>**118** (206) | 107<br>**132** (250) | 117<br>**145** (290) | 148<br>**200** (365) | 166<br>**224** (412) | 187<br>**256** (487) | 203<br>**278** (560) | 260<br>**358** (690) | 285<br>**400** (800) | 498<br>**670** (1250) | 696<br>**950** (1800) |
| | **250** | 6 | 68,5<br>**106** (180) | 76,3<br>**118** (206) | 84,2<br>**132** (250) | 92,1<br>**145** (290) | 120<br>**200** (365) | 135<br>**224** (412) | 152<br>**257** (487) | 165<br>**278** (560) | 210<br>**365** (690) | 241<br>**425** (800) | 404<br>**670** (1250) | 539<br>**950** (1800) |
| | **315** | 4,75 | 55,7<br>**106** (180) | 62,1<br>**118** (206) | 64,6<br>**132** (230) | 73,4<br>**150** (265) | 94,7<br>**200** (365) | 106<br>**224** (412) | 118<br>**257** (462) | 134<br>**290** (530) | 168<br>**365** (690) | 193<br>**425** (800) | 319<br>**670** (1250) | 425<br>**950** (1800) |

▲ Necessary forced lubrication with motor pump and possible heat exchanger (see ch. 6 and 12).



2586-01.02

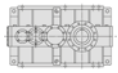

## $n_1$ = 1 200 min$^{-1}$

| Train of gears | $i_N$ | $n_{N2}$ min$^{-1}$ | Gear reducer size<br>$P_{N2}$ [kW]<br>$M_{N2}$ ($M_{2max}$) [kN m] | | | | | | | | | | | |
|---|---|---|---|---|---|---|---|---|---|---|---|---|---|---|
| | | | **4000** | **4001** | **4500** | **4501** | **5000** | **5001** | **5600** | **5601** | **6300** | **6301** | **7101** | **8001** |
| 2I | **10** | 118 | 1280<br>**100** (160) | 1430<br>**112** (185) | – | – | – | – | – | – | – | – | – | – |
| | **11,2** | 106 | 1120<br>**100** (160) | 1260<br>**112** (185) | 1380<br>**125** (218) | 1490<br>**135** (250) | – | – | – | – | – | – | – | – |
| | **12,5** | 95 | 1010<br>**100** (165) | 1140<br>**112** (185) | 1220<br>**125** (218) | 1330<br>**136** (250) | – | – | – | – | – | – | – | – |
| | **14** | 85 | 892<br>**100** (165) | 999<br>**112** (185) | 1100<br>**125** (224) | 1180<br>**135** (250) | 1540<br>**171** (325) | 1720<br>**192** (375) | 2160<br>**244** (437) | 2420<br>**273** (500) | 3130▲<br>**357** (630) | 3450▲<br>**393** (730) | 5620▲<br>**630** (1060) | 7770▲<br>**900** (1500) |
| | **16** | 75 | 774<br>**100** (160) | 867<br>**112** (180) | 970<br>**125** (224) | 1090<br>**140** (257) | 1340<br>**171** (315) | 1500<br>**192** (365) | 1920<br>**244** (437) | 2150<br>**273** (515) | 2720▲<br>**357** (630) | 3010▲<br>**402** (730) | 4880▲<br>**630** (1150) | 6760▲<br>**900** (1650) |
| | **18** | 67 | 714<br>**100** (160) | 799<br>**112** (185) | 843<br>**125** (212) | 929<br>**138** (243) | 1230<br>**171** (325) | 1380<br>**192** (375) | 1680<br>**244** (425) | 1880<br>**273** (487) | 2460▲<br>**357** (580) | 2770▲<br>**402** (690) | 4410▲<br>**630** (1090) | 6110▲<br>**900** (1550) |
| | **20** | 60 | 620<br>**100** (160) | 694<br>**112** (185) | 765<br>**125** (224) | 858<br>**140** (257) | 1080<br>**171** (325) | 1210<br>**192** (375) | 1530<br>**244** (450) | 1720<br>**273** (515) | 2150▲<br>**357** (630) | 2380▲<br>**402** (730) | 3900▲<br>**630** (1150) | 5560▲<br>**900** (1650) |
| | **22,4** | 53 | 560<br>**100** (150) | 627<br>**112** (175) | 675<br>**125** (212) | 756<br>**140** (243) | 956<br>**171** (325) | 1070<br>**192** (375) | 1350<br>**244** (425) | 1510<br>**273** (487) | 1940▲<br>**357** (600) | 2180▲<br>**402** (690) | 3530▲<br>**630** (1120) | 5030▲<br>**900** (1550) |
| 3I | **25** | 47,5 | 516<br>**104** (175) | 560<br>**112** (200) | 612<br>**125** (195) | 686<br>**140** (224) | 869<br>**171** (307) | 974<br>**192** (355) | 1200<br>**244** (425) | 1340<br>**273** (500) | – | – | 2520▲<br>**515** (1030) | 4710▲<br>**950** (1700) |
| | **28** | 42,5 | 465<br>**106** (175) | 516<br>**118** (200) | 535<br>**124** (224) | 546<br>**126** (250) | 878<br>**200** (345) | 978<br>**223** (400) | 1030<br>**238** (462) | 1080<br>**251** (500) | 1510<br>**330** (650) | 1750<br>**382** (775) | 2520▲<br>**555** (1120) | 4150▲<br>**950** (1700) |
| | **31,5** | 37,5 | 404<br>**106** (175) | 450<br>**118** (200) | 496<br>**130** (236) | 544<br>**143** (272) | 768<br>**200** (335) | 863<br>**225** (387) | 988<br>**258** (462) | 1030<br>**269** (545) | 1310<br>**330** (650) | 1490<br>**382** (775) | 2520▲<br>**640** (1220) | 3600▲<br>**950** (1700) |
| | **35,5** | 33,5 | 372<br>**106** (175) | 414<br>**118** (200) | 439<br>**132** (236) | 493<br>**149** (257) | 696<br>**200** (345) | 783<br>**225** (387) | 867<br>**258** (437) | 962<br>**286** (515) | 1200<br>**336** (670) | 1390<br>**390** (775) | 2390▲<br>**670** (1150) | 3250▲<br>**950** (1650) |
| | **40** | 30 | 323<br>**106** (170) | 359<br>**118** (195) | 403<br>**132** (236) | 453<br>**149** (272) | 609<br>**200** (345) | 685<br>**225** (387) | 791<br>**258** (475) | 893<br>**291** (545) | 1040<br>**336** (670) | 1190<br>**390** (775) | 2080<br>**670** (1220) | 2830▲<br>**950** (1750) |
| | **45** | 26,5 | 295<br>**106** (175) | 329<br>**118** (200) | 351<br>**132** (224) | 398<br>**150** (257) | 553<br>**200** (345) | 622<br>**225** (400) | 688<br>**258** (450) | 765<br>**287** (515) | 948<br>**343** (690) | 1110<br>**397** (800) | 1840<br>**670** (1250) | 2610▲<br>**950** (1800) |
| | **50** | 23,6 | 256<br>**106** (175) | 285<br>**118** (200) | 320<br>**132** (243) | 364<br>**150** (280) | 484<br>**200** (345) | 544<br>**225** (400) | 623<br>**258** (487) | 701<br>**290** (560) | 880<br>**366** (690) | 943<br>**400** (800) | 1600<br>**670** (1250) | 2270▲<br>**950** (1800) |
| | **56** | 21,2 | 232<br>**106** (175) | 259<br>**118** (200) | 278<br>**132** (230) | 316<br>**150** (265) | 449<br>**200** (355) | 505<br>**225** (400) | 546<br>**258** (462) | 609<br>**288** (530) | 804<br>**366** (690) | 888<br>**400** (800) | 1490<br>**670** (1250) | 2020<br>**950** (1800) |
| | **63** | 19 | 202<br>**106** (175) | 224<br>**118** (200) | 252<br>**132** (243) | 286<br>**150** (280) | 393<br>**200** (355) | 442<br>**225** (400) | 506<br>**258** (487) | 571<br>**291** (560) | 699<br>**366** (690) | 798<br>**426** (800) | 1300<br>**670** (1250) | 1760<br>**950** (1800) |
| | **71** | 17 | 189<br>**106** (175) | 210<br>**118** (200) | 219<br>**132** (230) | 249<br>**150** (265) | 354<br>**200** (355) | 398<br>**225** (400) | 444<br>**258** (462) | 496<br>**288** (530) | 643<br>**366** (690) | 733<br>**426** (800) | 1180<br>**670** (1250) | 1600<br>**950** (1800) |
| | **80** | 15 | 164<br>**106** (175) | 183<br>**118** (200) | 205<br>**132** (243) | 233<br>**150** (280) | 310<br>**200** (355) | 348<br>**225** (400) | 399<br>**258** (487) | 450<br>**291** (560) | 559<br>**366** (690) | 638<br>**426** (800) | 1020<br>**670** (1250) | 1390<br>**950** (1800) |
| | **90** | 13,2 | 151<br>**106** (175) | 168<br>**118** (200) | 178<br>**132** (230) | 203<br>**150** (265) | 283<br>**200** (355) | 318<br>**225** (400) | 350<br>**258** (462) | 392<br>**289** (530) | 504<br>**366** (650) | 586<br>**426** (750) | 943<br>**670** (1250) | 1310<br>**950** (1800) |
| | **100** | 11,8 | 131<br>**106** (175) | 146<br>**118** (200) | 162<br>**132** (243) | 184<br>**150** (280) | 248<br>**200** (355) | 279<br>**225** (400) | 319<br>**258** (487) | 360<br>**291** (560) | 441<br>**366** (690) | 504<br>**426** (800) | 818<br>**670** (1250) | 1140<br>**950** (1800) |
| | **125** | 9,5 | – | – | 129<br>**132** (212) | 147<br>**150** (243) | – | – | 255<br>**258** (425) | 288<br>**291** (487) | – | – | – | – |
| 4I | **125** | 9,5 | 101<br>**101** (180) | 113<br>**113** (206) | 123<br>**125** (250) | 143<br>**145** (290) | 195<br>**200** (365) | 218<br>**223** (412) | 234<br>**243** (487) | 267<br>**278** (560) | 337<br>**359** (690) | 369<br>**400** (800) | 619<br>**670** (1250) | 928<br>**950** (1800) |
| | **160** | 7,5 | 83,6<br>**106** (180) | 93,1<br>**118** (206) | 103<br>**132** (250) | 112<br>**145** (290) | 159<br>**200** (365) | 178<br>**225** (412) | 201<br>**258** (487) | 217<br>**278** (560) | 273<br>**366** (690) | 294<br>**401** (800) | 503<br>**670** (1250) | 719<br>**950** (1800) |
| | **200** | 6 | 69,8<br>**106** (180) | 77,7<br>**118** (206) | 85,8<br>**132** (250) | 93,7<br>**145** (290) | 119<br>**200** (365) | 133<br>**225** (412) | 150<br>**258** (487) | 162<br>**278** (560) | 213<br>**366** (690) | 228<br>**400** (800) | 399<br>**670** (1250) | 558<br>**950** (1800) |
| | **250** | 4,75 | 54,9<br>**106** (180) | 61,1<br>**118** (206) | 67,5<br>**132** (250) | 73,7<br>**145** (290) | 96,3<br>**200** (365) | 108<br>**225** (412) | 122<br>**258** (487) | 132<br>**278** (560) | 169<br>**366** (690) | 193<br>**426** (800) | 324<br>**670** (1250) | 432<br>**950** (1800) |
| | **315** | 3,75 | 44,7<br>**106** (180) | 49,7<br>**118** (206) | 51,8<br>**132** (230) | 58,8<br>**150** (265) | 75,9<br>**200** (365) | 85,3<br>**225** (412) | 95,1<br>**258** (462) | 107<br>**291** (530) | 135<br>**366** (690) | 154<br>**426** (800) | 256<br>**670** (1250) | 341<br>**950** (1800) |

▲ Necessary forced lubrication with motor pump and possible heat exchanger (see ch. 6 and 12).



2586-01.02

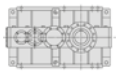

## $n_1$ = 1 000 min$^{-1}$

| Train of gears | $i_N$ | $n_{N2}$ min$^{-1}$ | Gear reducer size<br>$P_{N2}$ [kW]<br>$M_{N2}$ ($M_{2max}$) [kN m] | | | | | | | | | | | |
|---|---|---|---|---|---|---|---|---|---|---|---|---|---|---|
| | | | **4000** | **4001** | **4500** | **4501** | **5000** | **5001** | **5600** | **5601** | **6300** | **6301** | **7101** | **8001** |
| 2I | **10** | 100 | 1070<br>**101** (165) | 1200<br>**113** (185) | – | – | – | – | – | – | – | – | – | – |
| | **11,2** | 90 | 941<br>**101** (165) | 1050<br>**113** (185) | 1160<br>**126** (224) | 1300<br>**141** (250) | – | – | – | – | – | – | – | – |
| | **12,5** | 80 | 849<br>**101** (165) | 950<br>**113** (190) | 1020<br>**126** (224) | 1150<br>**141** (257) | – | – | – | – | – | – | – | – |
| | **14** | 71 | 747<br>**101** (165) | 836<br>**113** (190) | 921<br>**126** (224) | 989<br>**135** (257) | 1300<br>**174** (335) | 1460<br>**196** (387) | 1820<br>**247** (450) | 2020<br>**274** (500) | 2640<br>**361** (630) | 2880<br>**394** (730) | 4710▲<br>**635** (1090) | 6510▲<br>**905** (1550) |
| | **16** | 63 | 648<br>**101** (160) | 726<br>**113** (185) | 812<br>**126** (224) | 911<br>**141** (257) | 1140<br>**174** (325) | 1280<br>**196** (375) | 1610<br>**247** (450) | 1810<br>**276** (515) | 2290<br>**361** (630) | 2530<br>**406** (730) | 4090<br>**635** (1150) | 5660▲<br>**905** (1650) |
| | **18** | 56 | 598<br>**101** (165) | 669<br>**113** (190) | 706<br>**126** (212) | 792<br>**141** (243) | 1040<br>**174** (325) | 1170<br>**196** (375) | 1410<br>**247** (425) | 1590<br>**276** (487) | 2070<br>**361** (600) | 2330<br>**406** (690) | 3690<br>**635** (1120) | 5110▲<br>**905** (1550) |
| | **20** | 50 | 519<br>**101** (165) | 581<br>**113** (190) | 641<br>**126** (230) | 719<br>**141** (265) | 909<br>**174** (325) | 1020<br>**196** (375) | 1290<br>**247** (462) | 1450<br>**276** (515) | 1810<br>**361** (650) | 2000<br>**406** (750) | 3270<br>**635** (1180) | 4650▲<br>**905** (1700) |
| | **22,4** | 45 | 469<br>**101** (155) | 525<br>**113** (180) | 565<br>**126** (218) | 634<br>**141** (250) | 808<br>**174** (335) | 910<br>**196** (375) | 1130<br>**247** (437) | 1270<br>**276** (500) | 1630<br>**361** (615) | 1840<br>**406** (710) | 2950<br>**635** (1120) | 4210▲<br>**905** (1600) |
| 3I | **25** | 40 | 442<br>**106** (175) | 492<br>**118** (200) | 513<br>**126** (200) | 575<br>**141** (230) | 735<br>**174** (315) | 828<br>**196** (365) | 1010<br>**247** (437) | 1130<br>**276** (500) | – | – | 2240<br>**550** (1090) | 3940▲<br>**955** (1750) |
| | **28** | 35,5 | 389<br>**106** (175) | 433<br>**118** (200) | 476<br>**132** (230) | 484<br>**134** (257) | 733<br>**201** (355) | 830<br>**227** (400) | 917<br>**255** (475) | 917<br>**255** (515) | 1280<br>**336** (670) | 1480<br>**389** (775) | 2240<br>**595** (1180) | 3470▲<br>**955** (1750) |
| | **31,5** | 31,5 | 337<br>**106** (180) | 376<br>**118** (206) | 423<br>**133** (236) | 481<br>**151** (272) | 641<br>**201** (345) | 726<br>**227** (387) | 830<br>**260** (475) | 917<br>**287** (545) | 1110<br>**336** (670) | 1270<br>**389** (775) | 2220<br>**675** (1220) | 3010▲<br>**955** (1750) |
| | **35,5** | 28 | 310<br>**106** (180) | 346<br>**118** (206) | 368<br>**133** (243) | 418<br>**151** (257) | 582<br>**201** (345) | 658<br>**227** (400) | 728<br>**260** (450) | 804<br>**287** (515) | 1020<br>**342** (690) | 1180<br>**397** (800) | 2000<br>**675** (1180) | 2720▲<br>**955** (1650) |
| | **40** | 25 | 269<br>**106** (175) | 300<br>**118** (200) | 338<br>**133** (243) | 384<br>**151** (280) | 509<br>**201** (345) | 576<br>**227** (400) | 664<br>**260** (487) | 749<br>**293** (560) | 884<br>**342** (690) | 1010<br>**397** (800) | 1740<br>**675** (1250) | 2370<br>**955** (1800) |
| | **45** | 22,4 | 247<br>**106** (175) | 275<br>**118** (200) | 294<br>**133** (230) | 334<br>**151** (265) | 462<br>**201** (355) | 523<br>**227** (400) | 578<br>**260** (462) | 639<br>**287** (530) | 840<br>**365** (690) | 932<br>**400** (800) | 1540<br>**675** (1250) | 2190<br>**955** (1800) |
| | **50** | 20 | 214<br>**106** (175) | 238<br>**118** (200) | 268<br>**133** (243) | 305<br>**151** (280) | 404<br>**201** (355) | 457<br>**227** (400) | 523<br>**260** (487) | 588<br>**292** (560) | 739<br>**369** (690) | 840<br>**428** (800) | 1340<br>**675** (1250) | 1900<br>**955** (1800) |
| | **56** | 18 | 194<br>**106** (175) | 216<br>**118** (200) | 233<br>**133** (230) | 265<br>**151** (265) | 375<br>**201** (355) | 425<br>**227** (400) | 459<br>**260** (462) | 509<br>**288** (530) | 675<br>**369** (690) | 773<br>**417** (800) | 1250<br>**675** (1250) | 1690<br>**955** (1800) |
| | **63** | 16 | 168<br>**106** (175) | 188<br>**118** (200) | 211<br>**133** (243) | 240<br>**151** (280) | 328<br>**201** (355) | 372<br>**227** (400) | 425<br>**260** (487) | 479<br>**293** (560) | 587<br>**369** (690) | 668<br>**428** (800) | 1090<br>**675** (1250) | 1470<br>**955** (1800) |
| | **71** | 14 | 158<br>**106** (175) | 176<br>**118** (200) | 183<br>**133** (230) | 209<br>**151** (265) | 296<br>**201** (355) | 335<br>**227** (400) | 373<br>**260** (462) | 414<br>**289** (530) | 540<br>**369** (690) | 614<br>**428** (800) | 987<br>**675** (1250) | 1340<br>**955** (1800) |
| | **80** | 12,5 | 137<br>**106** (175) | 153<br>**118** (200) | 172<br>**133** (243) | 195<br>**151** (280) | 259<br>**201** (355) | 293<br>**227** (400) | 335<br>**260** (487) | 378<br>**293** (560) | 469<br>**369** (690) | 534<br>**428** (800) | 857<br>**675** (1250) | 1160<br>**955** (1800) |
| | **90** | 11,2 | 126<br>**106** (175) | 141<br>**118** (200) | 149<br>**133** (230) | 170<br>**151** (265) | 237<br>**201** (355) | 268<br>**227** (400) | 294<br>**260** (462) | 327<br>**289** (530) | 423<br>**369** (650) | 491<br>**428** (750) | 790<br>**675** (1250) | 1100<br>**955** (1800) |
| | **100** | 10 | 110<br>**106** (175) | 122<br>**118** (200) | 135<br>**133** (243) | 154<br>**151** (280) | 207<br>**201** (355) | 234<br>**227** (400) | 268<br>**260** (487) | 302<br>**293** (560) | 371<br>**369** (690) | 422<br>**428** (800) | 685<br>**675** (1250) | 955<br>**955** (1800) |
| | **125** | 8 | – | – | 108<br>**133** (212) | 123<br>**151** (243) | – | – | 214<br>**260** (425) | 242<br>**293** (487) | – | – | – | – |
| 4I | **125** | 8 | 88,8<br>**106** (180) | 98,9<br>**118** (206) | 103<br>**125** (250) | 119<br>**145** (290) | 163<br>**201** (365) | 185<br>**227** (412) | 195<br>**243** (487) | 223<br>**278** (560) | 289<br>**369** (690) | 308<br>**400** (800) | 518<br>**675** (1250) | 777<br>**955** (1800) |
| | **160** | 6,3 | 69,8<br>**106** (180) | 77,8<br>**118** (206) | 86,1<br>**133** (250) | 93,6<br>**145** (290) | 132<br>**201** (365) | 150<br>**227** (412) | 169<br>**260** (487) | 181<br>**278** (560) | 230<br>**369** (690) | 261<br>**428** (800) | 421<br>**675** (1250) | 601<br>**955** (1800) |
| | **200** | 5 | 58,3<br>**106** (180) | 64,9<br>**118** (206) | 71,8<br>**133** (250) | 78,1<br>**145** (290) | 99<br>**201** (365) | 112<br>**227** (412) | 126<br>**260** (487) | 135<br>**278** (560) | 179<br>**369** (690) | 192<br>**404** (800) | 334<br>**675** (1250) | 467<br>**955** (1800) |
| | **250** | 4 | 45,9<br>**106** (180) | 51,1<br>**118** (206) | 56,5<br>**133** (250) | 61,4<br>**145** (290) | 80,4<br>**201** (365) | 91<br>**227** (412) | 103<br>**260** (487) | 111<br>**280** (560) | 142<br>**369** (690) | 162<br>**428** (800) | 272<br>**675** (1250) | 362<br>**955** (1800) |
| | **315** | 3,15 | 37,3<br>**106** (180) | 41,5<br>**118** (206) | 43,4<br>**133** (230) | 49,3<br>**151** (265) | 63,4<br>**201** (365) | 71,7<br>**227** (412) | 79,9<br>**260** (462) | 90,1<br>**293** (530) | 114<br>**369** (690) | 129<br>**428** (800) | 214<br>**675** (1250) | 285<br>**955** (1800) |

▲ Necessary forced lubrication with motor pump and possible heat exchanger (see ch. 6 and 12).



2586-01.02

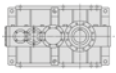

## $n_1$ = 750 min$^{-1}$

| Train of gears | $i_N$ | $n_{N2}$ min$^{-1}$ | Gear reducer size<br>$P_{N2}$ [kW]<br>$M_{N2}$ ($M_{2max}$) [kN m] | | | | | | | | | | | |
|---|---|---|---|---|---|---|---|---|---|---|---|---|---|---|
| | | | **4000** | **4001** | **4500** | **4501** | **5000** | **5001** | **5600** | **5601** | **6300** | **6301** | **7101** | **8001** |
| 2I | **10** | 75 | 808<br>**101** (165) | 904<br>**113** (190) | – | – | – | – | – | – | – | – | – | – |
| | **11,2** | 67 | 711<br>**101** (165) | 795<br>**113** (190) | 875<br>**127** (230) | 984<br>**142** (257) | – | – | – | – | – | – | – | – |
| | **12,5** | 60 | 642<br>**101** (170) | 718<br>**113** (195) | 772<br>**127** (230) | 868<br>**142** (265) | – | – | – | – | – | – | – | – |
| | **14** | 53 | 565<br>**101** (170) | 631<br>**113** (195) | 695<br>**127** (230) | 744<br>**136** (257) | 995<br>**177** (345) | 1130<br>**201** (387) | 1380<br>**250** (462) | 1520<br>**275** (515) | 2010<br>**366** (650) | 2170<br>**395** (750) | 3560<br>**640** (1120) | 4910<br>**910** (1600) |
| | **16** | 47,5 | 490<br>**101** (165) | 548<br>**113** (190) | 613<br>**127** (230) | 689<br>**142** (265) | 871<br>**177** (335) | 988<br>**201** (375) | 1230<br>**250** (462) | 1380<br>**281** (530) | 1750<br>**366** (650) | 1930<br>**412** (750) | 3090<br>**640** (1180) | 4270<br>**910** (1700) |
| | **18** | 42,5 | 452<br>**101** (170) | 505<br>**113** (195) | 533<br>**127** (218) | 599<br>**142** (250) | 796<br>**177** (335) | 904<br>**201** (387) | 1080<br>**250** (437) | 1210<br>**281** (500) | 1570<br>**366** (615) | 1770<br>**412** (710) | 2790<br>**640** (1150) | 3860<br>**910** (1600) |
| | **20** | 37,5 | 392<br>**101** (170) | 438<br>**113** (195) | 484<br>**127** (236) | 544<br>**142** (272) | 697<br>**177** (335) | 791<br>**201** (387) | 982<br>**250** (475) | 1100<br>**281** (530) | 1380<br>**366** (670) | 1520<br>**412** (775) | 2470<br>**640** (1220) | 3510<br>**910** (1750) |
| | **22,4** | 33,5 | 354<br>**101** (160) | 396<br>**113** (185) | 427<br>**127** (224) | 480<br>**142** (257) | 619<br>**177** (345) | 703<br>**201** (387) | 861<br>**250** (450) | 966<br>**281** (515) | 1240<br>**366** (630) | 1400<br>**412** (730) | 2230<br>**640** (1150) | 3180<br>**910** (1650) |
| 3I | **25** | 30 | 333<br>**107** (180) | 371<br>**119** (206) | 387<br>**127** (206) | 435<br>**142** (236) | 563<br>**177** (325) | 639<br>**201** (375) | 766<br>**250** (450) | 853<br>**279** (515) | – | – | 1860<br>**610** (1220) | 2980<br>**960** (1800) |
| | **28** | 26,5 | 293<br>**107** (180) | 326<br>**119** (206) | 357<br>**132** (236) | 403<br>**149** (257) | 552<br>**201** (365) | 631<br>**230** (412) | 704<br>**261** (487) | 762<br>**282** (515) | 986<br>**345** (690) | 1140<br>**400** (800) | 1860<br>**655** (1250) | 2620<br>**960** (1800) |
| | **31,5** | 23,6 | 254<br>**107** (180) | 283<br>**119** (206) | 319<br>**134** (243) | 363<br>**152** (280) | 483<br>**201** (355) | 552<br>**230** (400) | 630<br>**263** (487) | 702<br>**293** (560) | 894<br>**359** (690) | 976<br>**400** (800) | 1670<br>**680** (1250) | 2270<br>**960** (1800) |
| | **35,5** | 21,2 | 234<br>**107** (180) | 260<br>**119** (206) | 278<br>**134** (243) | 316<br>**152** (265) | 438<br>**201** (355) | 501<br>**230** (400) | 552<br>**263** (462) | 605<br>**288** (530) | 770<br>**345** (690) | 892<br>**400** (800) | 1510<br>**680** (1180) | 2060<br>**960** (1700) |
| | **40** | 19 | 203<br>**107** (175) | 226<br>**119** (200) | 255<br>**134** (243) | 290<br>**152** (280) | 383<br>**201** (355) | 438<br>**230** (400) | 504<br>**263** (487) | 568<br>**296** (560) | 698<br>**360** (690) | 761<br>**400** (800) | 1310<br>**680** (1250) | 1790<br>**960** (1800) |
| | **45** | 17 | 186<br>**107** (175) | 207<br>**119** (200) | 222<br>**134** (230) | 252<br>**152** (265) | 348<br>**201** (355) | 398<br>**230** (400) | 438<br>**263** (462) | 481<br>**288** (530) | 644<br>**373** (690) | 699<br>**400** (800) | 1160<br>**680** (1250) | 1650<br>**960** (1800) |
| | **50** | 15 | 161<br>**107** (175) | 180<br>**119** (200) | 203<br>**134** (243) | 230<br>**152** (280) | 304<br>**201** (355) | 348<br>**230** (400) | 397<br>**263** (487) | 444<br>**294** (560) | 561<br>**374** (690) | 635<br>**431** (800) | 1010<br>**680** (1250) | 1430<br>**960** (1800) |
| | **56** | 13,2 | 146<br>**107** (175) | 163<br>**119** (200) | 176<br>**134** (230) | 200<br>**152** (265) | 283<br>**201** (355) | 323<br>**230** (400) | 348<br>**263** (462) | 383<br>**289** (530) | 513<br>**374** (690) | 599<br>**431** (800) | 946<br>**680** (1250) | 1280<br>**960** (1800) |
| | **63** | 11,8 | 127<br>**107** (175) | 141<br>**119** (200) | 159<br>**134** (243) | 181<br>**152** (280) | 247<br>**201** (355) | 283<br>**230** (400) | 322<br>**263** (487) | 362<br>**295** (560) | 445<br>**374** (690) | 505<br>**431** (800) | 821<br>**680** (1250) | 1110<br>**960** (1800) |
| | **71** | 10,6 | 119<br>**107** (175) | 132<br>**119** (200) | 139<br>**134** (230) | 158<br>**152** (265) | 223<br>**201** (355) | 255<br>**230** (400) | 283<br>**263** (462) | 312<br>**290** (530) | 410<br>**374** (690) | 463<br>**431** (800) | 746<br>**680** (1250) | 1010<br>**960** (1800) |
| | **80** | 9,5 | 103<br>**107** (175) | 115<br>**119** (200) | 130<br>**134** (243) | 148<br>**152** (280) | 195<br>**201** (355) | 223<br>**230** (400) | 254<br>**263** (487) | 286<br>**295** (560) | 356<br>**374** (690) | 404<br>**431** (800) | 647<br>**680** (1250) | 876<br>**960** (1800) |
| | **90** | 8,5 | 95<br>**107** (175) | 106<br>**119** (200) | 113<br>**134** (230) | 128<br>**152** (265) | 178<br>**201** (355) | 204<br>**230** (400) | 223<br>**263** (462) | 246<br>**291** (530) | 321<br>**374** (650) | 371<br>**431** (750) | 597<br>**680** (1250) | 830<br>**960** (1800) |
| | **100** | 7,5 | 82,5<br>**107** (175) | 91,9<br>**119** (200) | 102<br>**134** (243) | 116<br>**152** (280) | 156<br>**201** (355) | 178<br>**230** (400) | 203<br>**263** (487) | 229<br>**296** (560) | 281<br>**374** (690) | 319<br>**431** (800) | 518<br>**680** (1250) | 721<br>**960** (1800) |
| | **125** | 6 | – | – | 81,8<br>**134** (212) | 93,1<br>**152** (243) | – | – | 163<br>**263** (425) | 183<br>**296** (487) | – | – | – | – |
| 4I | **125** | 6 | 66,8<br>**107** (180) | 74,5<br>**119** (206) | 78,4<br>**127** (250) | 89,2<br>**145** (290) | 123<br>**201** (365) | 140<br>**230** (412) | 158<br>**263** (487) | 167<br>**278** (560) | 219<br>**374** (690) | 249<br>**431** (800) | 392<br>**680** (1250) | 586<br>**960** (1800) |
| | **160** | 4,75 | 52,6<br>**107** (180) | 58,6<br>**119** (206) | 65,1<br>**134** (250) | 70,2<br>**145** (290) | 99,7<br>**201** (365) | 114<br>**230** (412) | 128<br>**263** (487) | 136<br>**278** (560) | 174<br>**374** (690) | 197<br>**431** (800) | 318<br>**680** (1250) | 454<br>**960** (1800) |
| | **200** | 3,75 | 43,9<br>**107** (180) | 48,9<br>**119** (206) | 54,3<br>**134** (250) | 58,6<br>**145** (290) | 74,5<br>**201** (365) | 85,2<br>**230** (412) | 95,8<br>**263** (487) | 103<br>**281** (560) | 136<br>**374** (690) | 154<br>**431** (800) | 252<br>**680** (1250) | 352<br>**960** (1800) |
| | **250** | 3 | 34,5<br>**107** (180) | 38,5<br>**119** (206) | 42,7<br>**134** (250) | 46,1<br>**145** (290) | 60,5<br>**201** (365) | 69,2<br>**230** (412) | 77,8<br>**263** (487) | 83,5<br>**282** (560) | 108<br>**374** (690) | 122<br>**431** (800) | 205<br>**680** (1250) | 273<br>**960** (1800) |
| | **315** | 2,36 | 28,1<br>**107** (180) | 31,3<br>**119** (206) | 32,8<br>**134** (230) | 37,3<br>**152** (265) | 47,7<br>**201** (365) | 54,6<br>**230** (412) | 60,6<br>**263** (462) | 68,3<br>**296** (530) | 86,2<br>**374** (690) | 97,7<br>**431** (800) | 162<br>**680** (1250) | 215<br>**960** (1800) |



2586-01.02

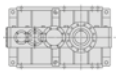

## $n_1 \leqslant$ 90 min$^{-1}$

| Train of gears | $i_N$ | $n_{N2}$ min$^{-1}$ | Gear reducer size<br>$P_{N2}$ [kW]<br>$M_{N2}$ ($M_{2max}$) [kN m] | | | | | | | | | | | |
|---|---|---|---|---|---|---|---|---|---|---|---|---|---|---|
| | | | **4000** | **4001** | **4500** | **4501** | **5000** | **5001** | **5600** | **5601** | **6300** | **6301** | **7101** | **8001** |
| 2I | **10** | 9 | 101<br>**106** (180) | 113<br>**118** (206) | – | – | – | – | – | – | – | – | – | – |
| | **11,2** | 8 | 89,1<br>**106** (180) | 99,2<br>**118** (206) | 109<br>**132** (243) | 124<br>**150** (280) | – | – | – | – | – | – | – | – |
| | **12,5** | 7,1 | 80,4<br>**106** (180) | 89,5<br>**118** (206) | 96,5<br>**132** (243) | 110<br>**150** (280) | – | – | – | – | – | – | – | – |
| | **14** | 6,3 | 70,8<br>**106** (180) | 78,8<br>**118** (206) | 86,9<br>**132** (243) | 92,4<br>**140** (280) | 135<br>**200** (365) | 159<br>**236** (412) | 181<br>**272** (487) | 186<br>**281** (560) | 248<br>**376** (690) | 266<br>**404** (800) | 447<br>**670** (1220) | 614<br>**950** (1700) |
| | **16** | 5,6 | 61,4<br>**106** (175) | 68,4<br>**118** (200) | 76,6<br>**132** (243) | 87,1<br>**150** (280) | 118<br>**200** (355) | 139<br>**236** (400) | 160<br>**272** (487) | 175<br>**297** (560) | 220<br>**384** (690) | 253<br>**450** (800) | 388<br>**670** (1250) | 534<br>**950** (1800) |
| | **18** | 5 | 56,6<br>**106** (175) | 63<br>**118** (200) | 66,6<br>**132** (230) | 75,7<br>**150** (265) | 108<br>**200** (355) | 127<br>**236** (400) | 140<br>**272** (462) | 151<br>**292** (530) | 206<br>**400** (650) | 232<br>**450** (750) | 351<br>**670** (1220) | 483<br>**950** (1700) |
| | **20** | 4,5 | 49,1<br>**106** (175) | 54,7<br>**118** (200) | 60,5<br>**132** (243) | 68,7<br>**150** (280) | 94,2<br>**200** (355) | 111<br>**236** (400) | 128<br>**272** (487) | 143<br>**303** (560) | 174<br>**385** (690) | 200<br>**450** (800) | 311<br>**670** (1250) | 439<br>**950** (1800) |
| | **22,4** | 4 | 44,4<br>**106** (165) | 49,4<br>**118** (190) | 53,3<br>**132** (230) | 60,6<br>**150** (265) | 83,8<br>**200** (355) | 98,8<br>**236** (400) | 112<br>**272** (462) | 121<br>**293** (530) | 163<br>**400** (650) | 183<br>**450** (750) | 281<br>**670** (1220) | 397<br>**950** (1700) |
| 3I | **25** | 3,55 | 40,8<br>**109** (180) | 45,6<br>**122** (206) | 48,4<br>**132** (212) | 55<br>**150** (243) | 76,2<br>**200** (335) | 89,9<br>**236** (375) | 99,9<br>**272** (462) | 109<br>**298** (530) | – | – | 260<br>**710** (1250) | 371<br>**1000** (1800) |
| | **28** | 3,15 | 35,9<br>**109** (180) | 40,1<br>**122** (206) | 42,8<br>**132** (236) | 48,7<br>**150** (280) | 67,7<br>**206** (365) | 82,2<br>**250** (412) | 88,1<br>**272** (487) | 97,2<br>**300** (560) | 133<br>**388** (690) | 154<br>**450** (800) | 242<br>**710** (1250) | 327<br>**1000** (1800) |
| | **31,5** | 2,8 | 31,1<br>**109** (180) | 34,8<br>**122** (206) | 40<br>**140** (243) | 45,8<br>**160** (280) | 59,2<br>**206** (355) | 71,9<br>**250** (400) | 80,5<br>**280** (487) | 90<br>**313** (560) | 119<br>**400** (690) | 132<br>**450** (800) | 210<br>**710** (1250) | 284<br>**1000** (1800) |
| | **35,5** | 2,5 | 28,6<br>**109** (180) | 32<br>**122** (206) | 34,8<br>**140** (243) | 39,8<br>**160** (272) | 53,7<br>**206** (355) | 65,2<br>**250** (400) | 70,6<br>**280** (462) | 78,8<br>**313** (530) | 107<br>**400** (690) | 120<br>**450** (800) | 190<br>**710** (1220) | 256<br>**1000** (1700) |
| | **40** | 2,24 | 24,9<br>**109** (175) | 27,8<br>**122** (200) | 32<br>**140** (243) | 36,5<br>**160** (280) | 47<br>**206** (355) | 57,1<br>**250** (400) | 64,4<br>**280** (487) | 72,5<br>**315** (560) | 93<br>**400** (690) | 103<br>**450** (800) | 165<br>**710** (1250) | 223<br>**1000** (1800) |
| | **45** | 2 | 22,7<br>**109** (175) | 25,4<br>**122** (200) | 27,8<br>**140** (230) | 31,8<br>**160** (265) | 42,7<br>**206** (355) | 51,8<br>**250** (400) | 56<br>**280** (462) | 63<br>**315** (530) | 82,9<br>**400** (690) | 94,4<br>**450** (800) | 146<br>**710** (1250) | 206<br>**1000** (1800) |
| | **50** | 1,8 | 19,7<br>**109** (175) | 22,1<br>**122** (200) | 25,4<br>**140** (243) | 29<br>**160** (280) | 37,3<br>**206** (355) | 45,3<br>**250** (400) | 50,7<br>**280** (487) | 57,1<br>**315** (560) | 72<br>**400** (690) | 79,6<br>**450** (800) | 127<br>**710** (1250) | 179<br>**1000** (1800) |
| | **56** | 1,6 | 17,9<br>**109** (175) | 20<br>**122** (200) | 22,1<br>**140** (230) | 25,2<br>**160** (265) | 34,7<br>**206** (355) | 42,1<br>**250** (400) | 44,5<br>**280** (462) | 50<br>**315** (530) | 65,8<br>**400** (690) | 75<br>**450** (800) | 118<br>**710** (1250) | 159<br>**1000** (1800) |
| | **63** | 1,4 | 15,5<br>**109** (175) | 17,4<br>**122** (200) | 20<br>**140** (243) | 22,8<br>**160** (280) | 30,3<br>**206** (355) | 36,8<br>**250** (400) | 41,2<br>**280** (487) | 46,4<br>**315** (560) | 57,2<br>**400** (690) | 63,2<br>**450** (800) | 103<br>**710** (1250) | 138<br>**1000** (1800) |
| | **71** | 1,25 | 14,6<br>**109** (175) | 16,3<br>**122** (200) | 17,4<br>**140** (230) | 19,9<br>**160** (265) | 27,3<br>**206** (355) | 33,1<br>**250** (400) | 36,1<br>**280** (462) | 40,7<br>**315** (530) | 52,7<br>**400** (690) | 58<br>**450** (800) | 93,5<br>**710** (1250) | 126<br>**1000** (1800) |
| | **80** | 1,12 | 12,6<br>**109** (175) | 14,1<br>**122** (200) | 16,3<br>**140** (243) | 18,6<br>**160** (280) | 23,9<br>**206** (355) | 29<br>**250** (400) | 32,5<br>**280** (487) | 36,5<br>**315** (560) | 45,8<br>**400** (690) | 50,6<br>**450** (800) | 81,1<br>**710** (1250) | 109<br>**1000** (1800) |
| | **90** | 1 | 11,6<br>**109** (175) | 13<br>**122** (200) | 14,1<br>**140** (230) | 16,2<br>**160** (265) | 21,9<br>**206** (355) | 26,5<br>**250** (400) | 28,5<br>**280** (462) | 32<br>**315** (530) | 41,3<br>**400** (650) | 46,4<br>**450** (750) | 74,8<br>**710** (1250) | 104<br>**1000** (1800) |
| | **100** | 0,9 | 10,1<br>**109** (175) | 11,3<br>**122** (200) | 12,8<br>**140** (243) | 14,7<br>**160** (280) | 19,1<br>**206** (355) | 23,2<br>**250** (400) | 26<br>**280** (487) | 29,2<br>**315** (560) | 36,1<br>**400** (690) | 39,9<br>**450** (800) | 64,9<br>**710** (1250) | 89,9<br>**1000** (1800) |
| | **125** | 0,71 | – | – | 10,3<br>**140** (212) | 11,7<br>**160** (243) | – | – | 20,8<br>**280** (425) | 23,4<br>**315** (487) | – | – | – | – |
| 4I | **125** | 0,71 | 8,19<br>**109** (180) | 9,16<br>**122** (206) | 10,4<br>**140** (250) | 11,4<br>**154** (290) | 15,1<br>**206** (365) | 18,3<br>**250** (412) | 20,2<br>**280** (487) | 21,8<br>**303** (560) | 28,2<br>**400** (690) | 31,1<br>**450** (800) | 49,1<br>**710** (1250) | 73,1<br>**1000** (1800) |
| | **160** | 0,56 | 6,44<br>**109** (180) | 7,21<br>**122** (206) | 8,16<br>**140** (250) | 9,26<br>**159** (290) | 12,2<br>**206** (365) | 14,8<br>**250** (412) | 16,4<br>**280** (487) | 18,2<br>**311** (560) | 22,4<br>**400** (690) | 24,7<br>**450** (800) | 39,9<br>**710** (1250) | 56,6<br>**1000** (1800) |
| | **200** | 0,45 | 5,37<br>**109** (180) | 6,02<br>**122** (206) | 6,81<br>**140** (250) | 7,78<br>**160** (290) | 9,14<br>**206** (365) | 11,1<br>**250** (412) | 12,3<br>**280** (487) | 13,8<br>**315** (560) | 17,4<br>**400** (690) | 19,3<br>**450** (800) | 31,6<br>**710** (1250) | 44<br>**1000** (1800) |
| | **250** | 0,36 | 4,23<br>**109** (180) | 4,73<br>**122** (206) | 5,36<br>**140** (250) | 6,12<br>**160** (290) | 7,43<br>**206** (365) | 9,02<br>**250** (412) | 9,96<br>**280** (487) | 11,2<br>**315** (560) | 13,8<br>**400** (690) | 15,3<br>**450** (800) | 25,7<br>**710** (1250) | 34<br>**1000** (1800) |
| | **315** | 0,28 | 3,44<br>**109** (180) | 3,85<br>**122** (206) | 4,11<br>**140** (230) | 4,69<br>**160** (265) | 5,85<br>**206** (365) | 7,1<br>**250** (412) | 7,75<br>**280** (462) | 8,71<br>**315** (530) | 11,1<br>**400** (690) | 12,2<br>**450** (800) | 20,3<br>**710** (1250) | 26,9<br>**1000** (1800) |



2586-01.02

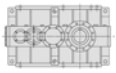

## Summary of transmission ratios *i*

| Train of gears | $i_N$ | Gear reducer size | | | | | | | | | | | |
|---|---|---|---|---|---|---|---|---|---|---|---|---|---|
| | | *i* | | | | | | | | | | | |
| | | **4000** | **4001** | **4500** | **4501** | **5000** | **5001** | **5600** | **5601** | **6300** | **6301** | **7101** | **8001** |
| **2I** | **10** | *9,86* | *9,86* | – | – | – | – | – | – | – | – | – | – |
| | **11,2** | *11,2* | *11,2* | *11,4* | *11,4* | – | – | – | – | – | – | – | – |
| | **12,5** | *12,4* | *12,4* | *12,9* | *12,9* | – | – | – | – | – | – | – | – |
| | **14** | *14,1* | *14,1* | *14,3* | *14,3* | *14** | *14** | *14,2** | *14,2** | *14,3* | *14,3* | *14,1* | *14,6* |
| | **16** | *16,3* | *16,3* | *16,2* | *16,2* | *16** | *16** | *16** | *16** | *16,5* | *16,8* | *16,3* | *16,8* |
| | **18** | *17,6* | *17,6* | *18,7* | *18,7* | *17,5** | *17,5** | *18,3* | *18,3* | *18,3* | *18,3* | *18** | *18,6* |
| | **20** | *20,3* | *20,3* | *20,6* | *20,6* | *20** | *20** | *20** | *20** | *20,9* | *21,3* | *20,3* | *20,4* |
| | **22,4** | *22,5** | *22,5** | *23,3* | *23,3* | *22,5** | *22,5** | *22,8* | *22,8* | *23,1* | *23,1* | *22,5** | *22,6* |
| **3I** | **25** | *25,2* | *25,2* | *25,7* | *25,7* | *24,8* | *24,8* | *25,7* | *25,7* | – | – | *25,7* | *25,4* |
| | **28** | *28,7* | *28,7* | *29,1* | *29,1* | *28,7* | *28,7* | *29,1* | *29,1* | *27,4* | *27,5* | *27,7* | *28,8* |
| | **31,5** | *33* | *33* | *32,9* | *32,9* | *32,8* | *32,8* | *32,8* | *32,8* | *31,6* | *32,2* | *31,9* | *33,2* |
| | **35,5** | *35,9* | *35,9* | *37,9* | *37,9* | *36,1* | *36,1* | *37,4* | *37,4* | *35,2* | *35,2* | *35,3* | *36,8* |
| | **40** | *41,3* | *41,3* | *41,3* | *41,3* | *41,3* | *41,3* | *41* | *41* | *40,5* | *41,3* | *40,7* | *42,3* |
| | **45** | *45,2* | *45,2* | *47,4* | *47,4* | *45,5* | *45,5* | *47,1* | *47,1* | *45,5* | *44,9* | *45,9* | *45,8* |
| | **50** | *52,1* | *52,1* | *52* | *52* | *52** | *52** | *52** | *52** | *52,3* | *53,3* | *52,9* | *52,7* |
| | **56** | *57,4* | *57,4* | *59,7* | *59,7* | *56** | *56** | *59,3** | *59,3** | *57,3* | *56,6* | *56,5* | *59,1* |
| | **63** | *66,2* | *66,2* | *66* | *66* | *64** | *64** | *64** | *64** | *65,9* | *67,1* | *65,1* | *68,1* |
| | **71** | *70,6* | *70,6* | *75,9* | *75,9* | *71,1* | *71,1* | *73** | *73** | *71,6* | *73,1* | *71,6* | *74,9* |
| | **80** | *81,3* | *81,3* | *81,2* | *81,2* | *81,2* | *81,2* | *81,2* | *81,2* | *82,4* | *83,9* | *82,5* | *86,3* |
| | **90** | *88,2* | *88,2* | *93,3* | *93,3* | *88,8* | *88,8* | *92,7* | *92,7* | *91,3* | *91,3* | *89,5* | *91* |
| | **100** | *102* | *102* | *103* | *103* | *102* | *102* | *102* | *102* | *104* | *106* | *103* | *105* |
| | **125** | – | – | *129* | *129* | – | – | *127* | *127* | – | – | – | – |
| **4I** | **125** | *125* | *125* | *127* | *127* | *129* | *129* | *131* | *131* | *134* | *136* | *136* | *129* |
| | **160** | *159* | *159* | *162* | *162* | *159* | *159* | *161* | *161* | *168* | *171* | *168* | *166* |
| | **200** | *191* | *191* | *194* | *194* | *212* | *212* | *215* | *215* | *216* | *220* | *211* | *214* |
| | **250** | *243* | *243* | *246* | *246* | *261* | *261* | *265* | *265* | *272* | *277* | *260* | *277* |
| | **315** | *299* | *299* | *321* | *321* | *332* | *332* | *341* | *341* | *340* | *347* | *330* | *351* |

* **Finite** transmission ratio.

# 8 - Dimensions, designs, mounting positions
(helical gear reducers)

**8.1 - Gear reducers R 2I** ..... **50**
Dimensions ..... 50
Designs (direction of rotation) ..... 51
Mounting positions ..... 52
Lubrication - Plug position and oil quantity ..... 53

**8.2 - Gear reducers R 3I** ..... **54**
Dimensions ..... 54
Designs (direction of rotation) ..... 55
Mounting positions ..... 56
Lubrication - Plug position and oil quantity ..... 57

**8.3 - Gear reducers R 4I** ..... **58**
Dimensions ..... 58
Designs (direction of rotation) ..... 59
Mounting positions ..... 60
Lubrication - Plug position and oil quantity ..... 61

# 8.1 - Gear reducers R 2I

## Dimensions

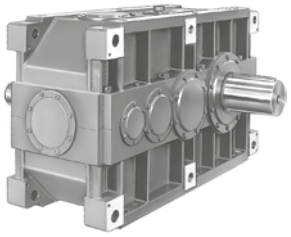

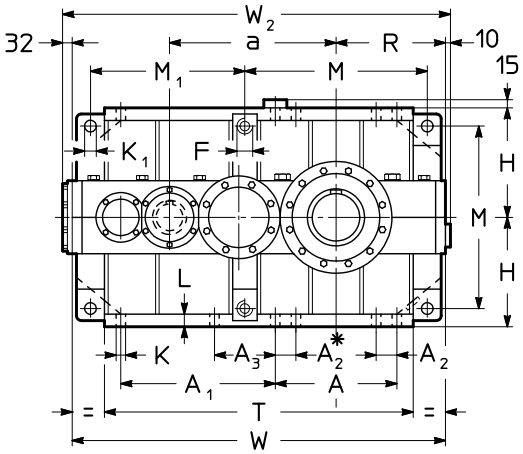


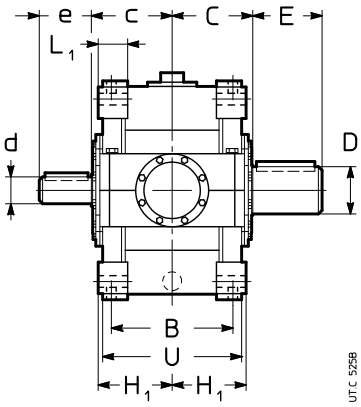


* For size ⩾ 6300.

| Size | a | A | $A_1$ / $M_1$ | $A_2$ | $A_3$ | B | C | c | F 1) | H h11 R | $H_1$ h12 | K Ø | $K_1$ Ø H11 | L | $L_1$ | M | T | U | W | $W_2$ 2) | kg | kg 4) |
|---|---|---|---|---|---|---|---|---|---|---|---|---|---|---|---|---|---|---|---|---|---|---|
| **4000**<br>**4001** | 700 | 505 | 625 | 90 | – | 500 | 330 | 330 | M45 | 450 | 296 | 39 | 48 | 52 | 116 | 750 | 1260 | 580 | 1525 | 1567 | 2320<br>2400 | 2390<br>2480 |
| **4500**<br>**4501** | 750 | 505 | 675 | 90 | – | 500 | 358 | 330 | M45 | 450 | 296 | 39 | 48 | 52 | 116 | 750 | 1310 | 580 | 1575 | 1617 | 2660<br>2730 | 2750<br>2840 |
| **5000**<br>**5001** | 875 | 630 | 785 | 115 | – | 625 | 410 | 426[3] | M56 | 560 | 370 | 48 | 60 | 65 | 148 | 930 | 1575 | 725 | 1905 | 1947 | 4540<br>4660 | 4680<br>4820 |
| **5600**<br>**5601** | 935 | 630 | 845 | 115 | – | 625 | 445 | 426 | M56 | 560 | 370 | 48 | 60 | 65 | 148 | 930 | 1635 | 725 | 1965 | 2007 | 5430<br>5550 | 5630<br>5770 |
| **6300**<br>**6301** | 1080 | 770 | 970 | 115 | – | 695 | 490 | 472 | M56 | 630 | 406 | 48 | 60 | 65 | 148 | 1070 | 1900 | 795 | 2230 | 2272 | 7650<br>7750 | 7930<br>8080 |
| **7101** | 1270 | 930 | 1228 | 115 | 590 | 843 | 601 | 537 | M56 | 710 | 481 | 48 | 66 | 71 | 185 | 1230 | 2279 | 943 | 2648 | 2676 | 12950 | 13450 |
| **8001** | 1430 | 1008 | 1286 | 145 | 596 | 944 | 682 | 600 | M90 | 900 | 544 | 60 | 95 | 85 | 250 | 1574 | 2590 | 1064 | 3086 | 3114 | 19850 | 20570 |

| Size | D Ø | E | d Ø | e | d Ø | e |
|---|---|---|---|---|---|---|
| | | | $i_N$ ⩽ 11,2 | | $i_N$ ⩾ 12,5 | |
| **4000**<br>**4001** | 190<br>200 | 280 | 110 | 210 | 90 | 170 |
| | | | $i_N$ ⩽ 12,5 | | $i_N$ ⩾ 14 | |
| **4500**<br>**4501** | 210<br>220 | 300 | 110 | 210 | 90 | 170 |
| **5000**<br>**5001** | 240<br>250 | 330 | – | – | 110 | 210 |
| **5600**<br>**5601** | 270<br>280 | 380 | – | – | 110 | 210 |
| **6300**<br>**6301** | 300<br>320 | 430 | – | – | 125 | 210 |
| **7101** | 360 | 590 | – | – | 180 | 300 |
| **8001** | 400 | 660 | – | – | 200 | 350 |

1) Working length on thread 1,7 · F.
2) For mounting positions B6, B7, V5, V6, dimension $W_2$ increases by approx. 20 for overall dimensions of filler plug.
3) **c** dimension overhangs from **C** dimension.
4) Values valid for double extension low speed shaft end.

2586-01.02

## 8.1 - R 2I gear reducers

### **Designs** (direction of rotation)

Solid low speed shaft (standard)

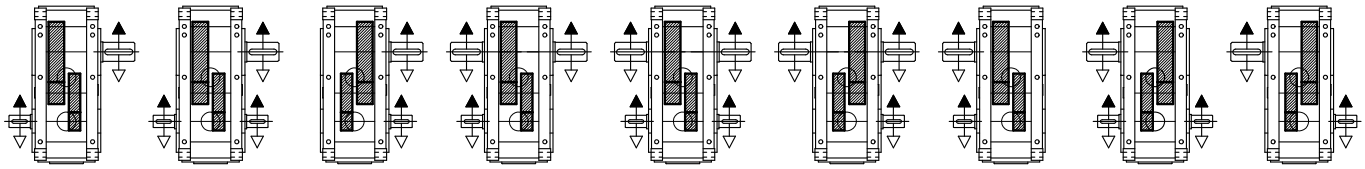

UP1A UP1D UP1E UP1F UP1G UP1H UP1N UP1M UP1L

Hollow low speed shaft with shrink disc on machine opposite side (on request)

UP1A UP1D — — — — — UP1M UP1L

Hollow low speed shaft with shrink disc on machine side (on request)

UP1A UP1D — — — — — UP1M UP1L

UT. C 2177

Hollow low speed shaft with keyway (on request)

UP1A UP1D — — — — — UP1M UP1L

## 8.1 - R 2I gear reducers

### Mounting positions

Except specific needs, prefer mounting position B3 (see ch. 2).



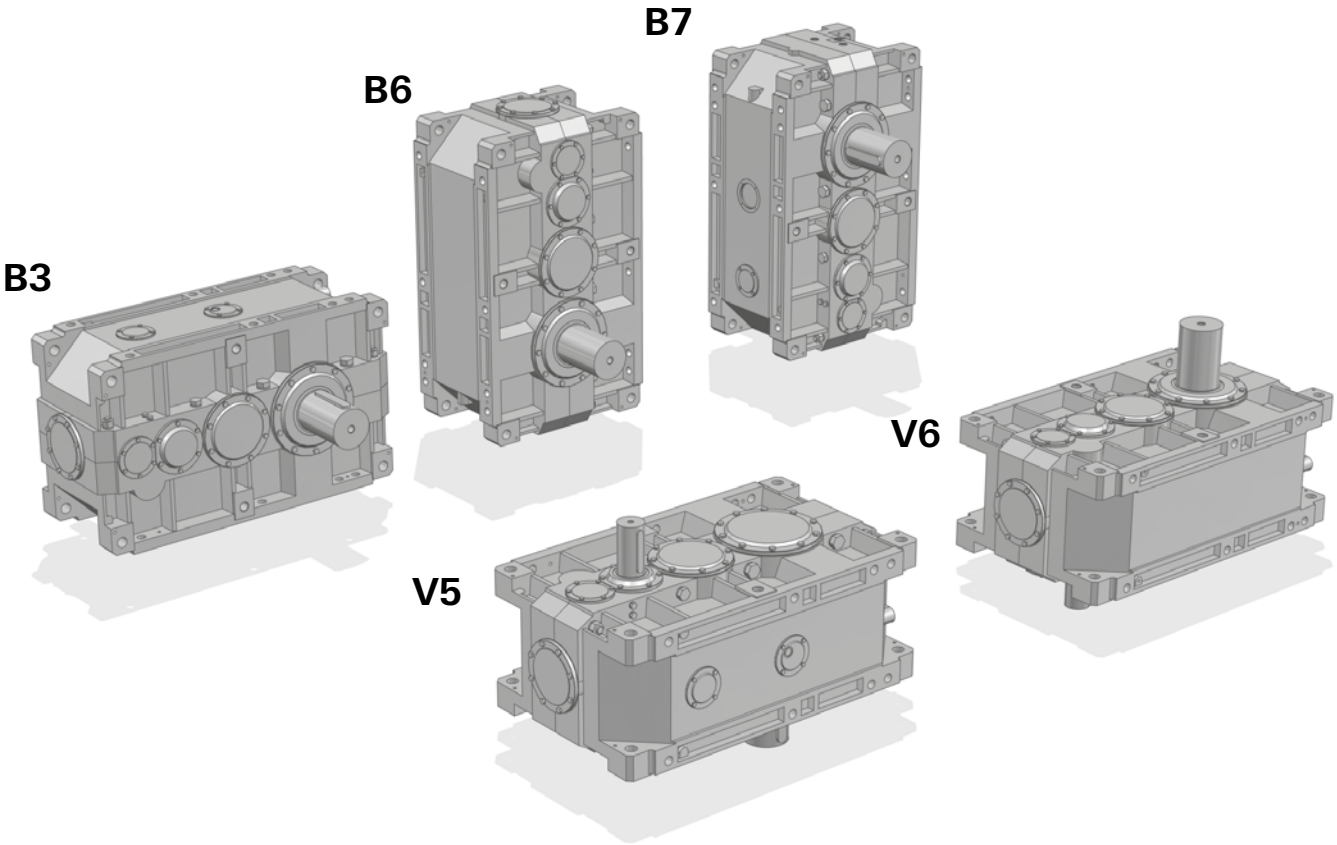


Possible high oil splash: for the corrective factor $ft_3$ of nominal thermal power $Pt_N$ see ch. 4.

Possible bearing lubrication pump: consult us for verification.

1) Mounting position **B3** may be identified from the position of the screw-heads as arrowed. The same is valid for mounting positions V5 and V6 with double extension or hollow low speed shaft: in these cases, consider the **position of low speed wheel**, for the identification of correct mounting position (see also «Designs» at the previous page).

* Valid in case of **hollow low speed shaft** (with shrink disc or keyway).

▼ Oil filler plug
● Oil level plug
■ Oil drain plug

▽ Oil filler plug on opposite side (not in view)
▨ Oil level plug on opposite side (not in view)
⊘ Oil drain plug on opposite side (not in view)

2586-01.02

## 8.1 - R 2I gear reducers

### Lubrication - Plug position and oil quantity

Oil quantity are approximate for provisioning and can vary according to the design and specific application. The exact quantity the gear reducer is to be filled with is definitely given by the level.

**B3**

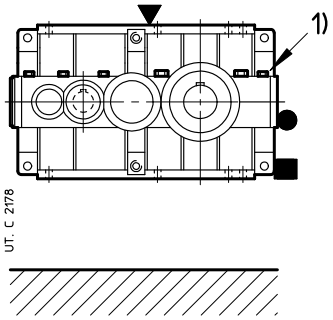


**B6**

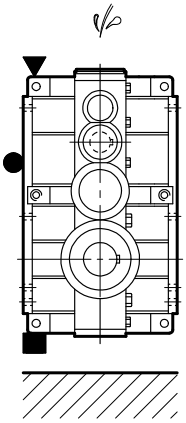

**B7**

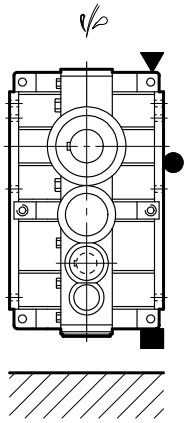

**V5**

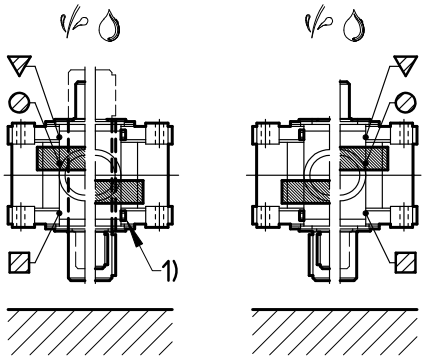


| | | | |
|---|---|---|---|
| UP1A<br>UP1D<br>UP1F<br>UP1G | UP1E<br>UP1H | UP1N | UP1M<br>UP1L |
| UP1A*<br>UP1D* | UP1M*<br>UP1L* | | |

**V6**

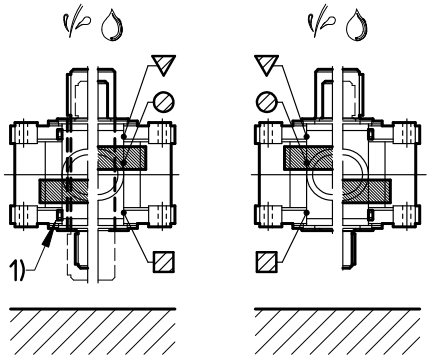


| | | | |
|---|---|---|---|
| UP1A<br>UP1D<br>UP1F<br>UP1G | UP1E<br>UP1H | UP1N | UP1M<br>UP1L |
| UP1A*<br>UP1D* | UP1M*<br>UP1L* | | |

| Size | Oil quantity [l] | | | | |
|---|---|---|---|---|---|
| | B3 | B6 | B7 | V5, V6 | |
| | | | | with low speed shaft on bottom | with low speed wheel on top |
| **4000, 4001** | 118 | 150 | 224 | 236 | 250 |
| **4500, 4501** | 112 | 140 | 236 | 224 | 250 |
| **5000, 5001** | 236 | 300 | 450 | 475 | 500 |
| **5600, 5601** | 224 | 265 | 450 | 450 | 500 |
| **6300, 6301** | 335 | 400 | 670 | 630 | 710 |
| **7101** | 560 | 670 | 1120 | 1000 | 1120 |
| **8001** | 950 | 1060 | 1800 | 1700 | 1900 |

See notes at previous page.

# 8.2 - Gear reducers R 3I

## Dimensions

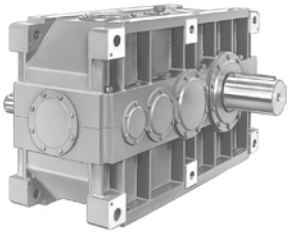

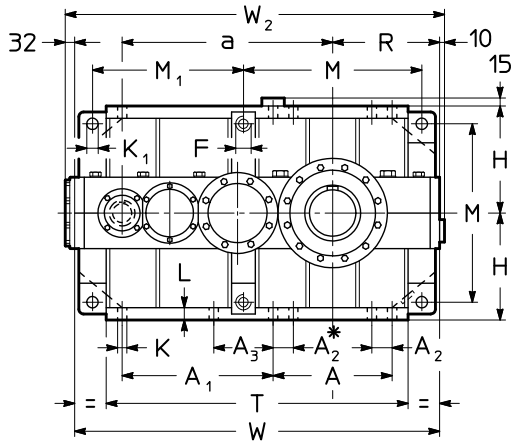


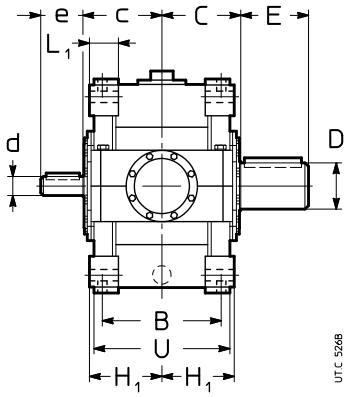


* For sizes ⩾ 6300.

| Size | a | A | $A_1$ / $M_1$ | $A_2$ | $A_3$ | B | C | c | F 1) | H h11 / R | $H_1$ h12 | K Ø | $K_1$ Ø H11 | L | $L_1$ | M | T | U | W | $W_2$ 2) | kg 3) |
|---|---|---|---|---|---|---|---|---|---|---|---|---|---|---|---|---|---|---|---|---|---|
| **4000**<br>**4001** | 900 | 505 | 625 | 90 | – | 500 | 330 | 325 | M45 | 450 | 296 | 39 | 48 | 52 | 116 | 750 | 1260 | 580 | 1525 | 1567 | 2370<br>2450 | 2440<br>2530 |
| **4500**<br>**4501** | 950 | 505 | 675 | 90 | – | 500 | 358 | 325 | M45 | 450 | 296 | 39 | 48 | 52 | 116 | 750 | 1310 | 580 | 1575 | 1617 | 2700<br>2780 | 2790<br>2890 |
| **5000**<br>**5001** | 1125 | 630 | 785 | 115 | – | 625 | 410 | 405 | M56 | 560 | 370 | 48 | 60 | 65 | 148 | 930 | 1575 | 725 | 1905 | 1947 | 4620<br>4740 | 4760<br>4900 |
| **5600**<br>**5601** | 1185 | 630 | 845 | 115 | – | 625 | 445 | 405 | M56 | 560 | 370 | 48 | 60 | 65 | 148 | 930 | 1635 | 725 | 1965 | 2007 | 5530<br>5650 | 5730<br>5870 |
| **6300**<br>**6301** | 1380 | 770 | 970 | 115 | – | 695 | 490 | 455 | M56 | 630 | 406 | 48 | 60 | 65 | 148 | 1070 | 1900 | 795 | 2230 | 2272 | 7760<br>7860 | 8040<br>8190 |
| **7101** | 1630 | 930 | 1228 | 115 | 590 | 843 | 601 | 510 | M56 | 710 | 481 | 48 | 66 | 71 | 185 | 1230 | 2279 | 943 | 2648 | 2676 | 13190 | 13690 |
| **8001** | 1880 | 1008 | 1286 | 145 | 596 | 944 | 682 | 577 | M90 | 900 | 544 | 60 | 95 | 85 | 250 | 1574 | 2590 | 1064 | 3086 | 3114 | 20430 | 21150 |

| Size | D Ø | E | d Ø | e | d Ø | e |
|---|---|---|---|---|---|---|
| | | | $i_N \leqslant 50$ | | $i_N \geqslant 56$ | |
| **4000**<br>**4001** | 190<br>200 | 280 | 80 | 170 | 65 | 140 |
| | | | $i_N \leqslant 56$ | | $i_N \geqslant 63$ | |
| **4500**<br>**4501** | 210<br>220 | 300 | 80 | 170 | 65 | 140 |
| | | | $i_N \leqslant 50$ | | $i_N \geqslant 56$ | |
| **5000**<br>**5001** | 240<br>250 | 330 | 100 | 210 | 80 | 170 |
| | | | $i_N \leqslant 56$ | | $i_N \geqslant 63$ | |
| **5600**<br>**5601** | 270<br>280 | 380 | 100 | 210 | 80 | 170 |
| | | | $i_N \leqslant 50$ | | $i_N \geqslant 56$ | |
| **6300**<br>**6301** | 300<br>320 | 430 | 110 | 210 | 90 | 170 |
| **7101** | 360 | 590 | 120 | 210 | – | – |
| **8001** | 400 | 660 | 150 | 250 | – | – |

1) Working length on thread 1,7 · F.
2) For mounting positions B6, B7, V5, V6, dimension $W_2$ increases by approx. 20 for overall dimensions of filler plug.
3) Values valid for double extension low speed shaft end.

## 8.2 - Gear reducers R 3I

### **Designs** (direction of rotation)

Solid low speed shaft (standard)

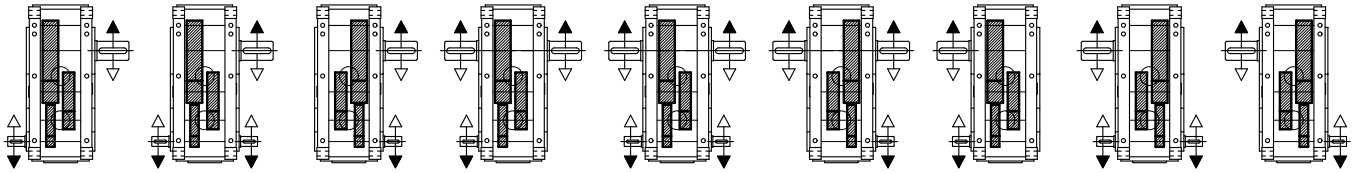

UP1A UP1D UP1E UP1F UP1G UP1H UP1N UP1M UP1L

Hollow low speed shaft with shrink disc on machine opposite side (on request)

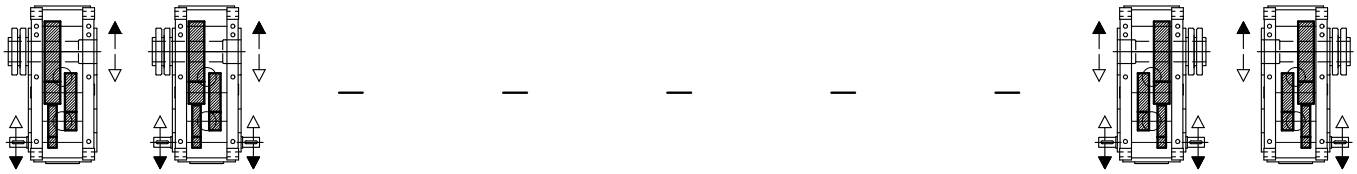

UP1A UP1D — — — — — UP1M UP1L

Hollow low speed shaft with shrink disc on machine side (on request)

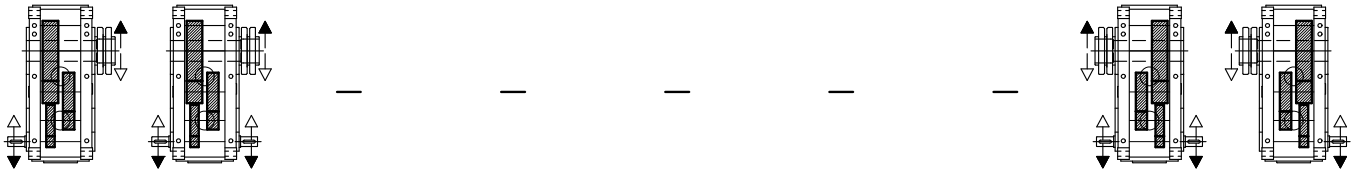

UP1A UP1D — — — — — UP1M UP1L

UT. C 2179

Hollow low speed shaft with keyway (on request)

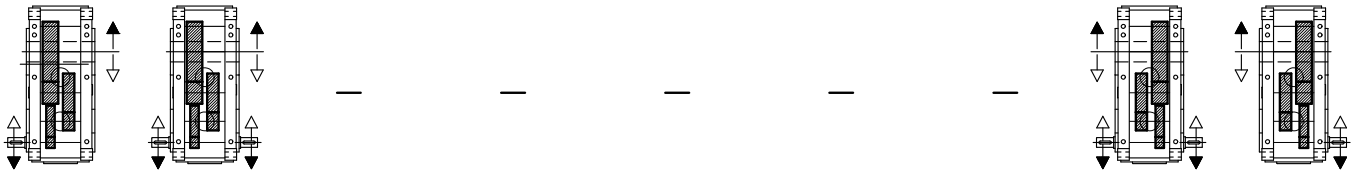

UP1A UP1D — — — — — UP1M UP1L

## 8.2 - Gear reducers R 3I

### Mounting positions

Except specific needs, prefer mounting position B3 (see ch. 2).



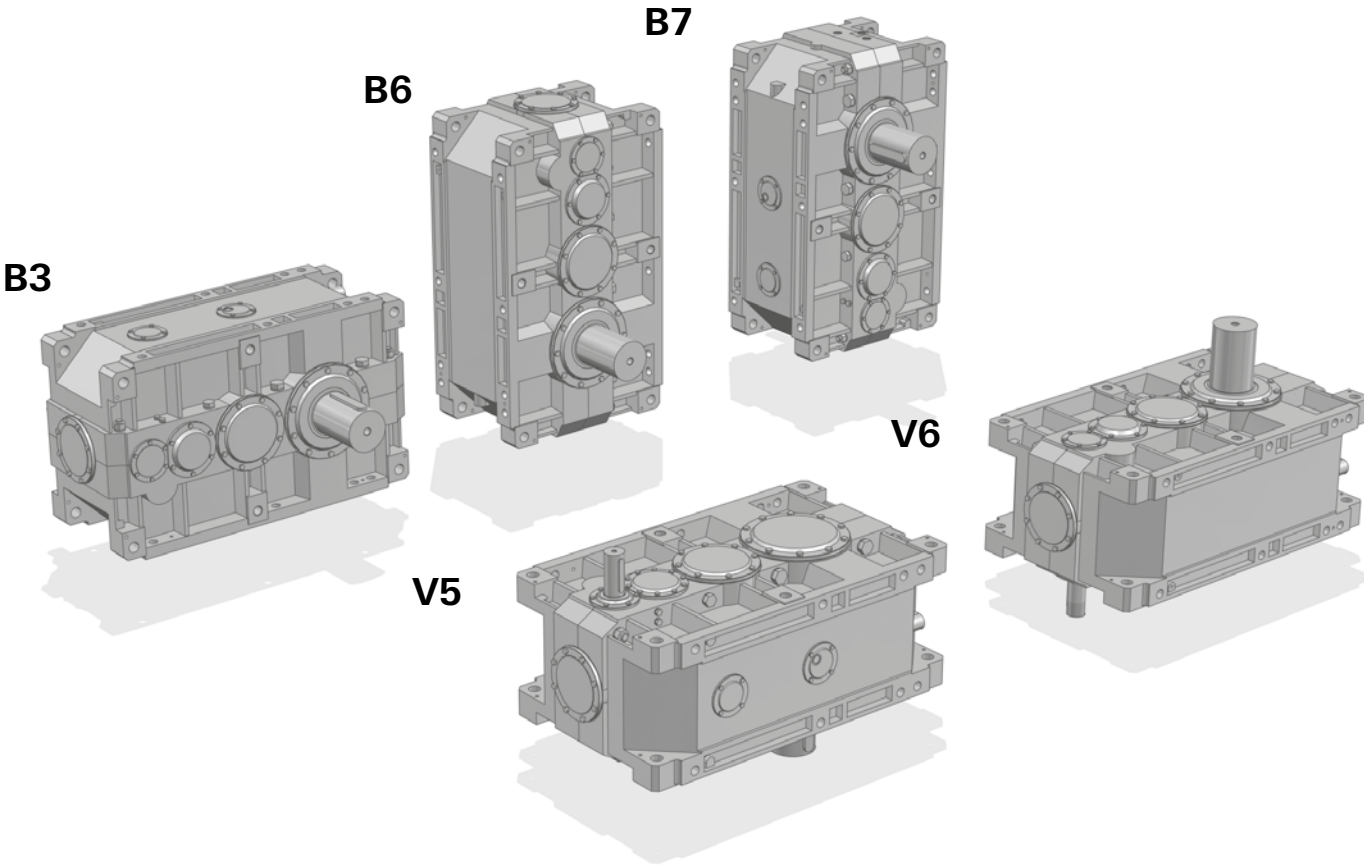


Possible high oil splash: for the corrective factor $ft_3$ of nominal thermal power $Pt_N$ see ch. 4.

Possible bearing lubrication pump: consult us for verification.

1) Mounting position **B3** may be identified from the position of the screw-heads as arrowed. The same is valid for mounting positions V5 and V6 with double extension or hollow low speed shaft: in these cases, consider the **position of low speed wheel**, for the identification of correct mounting position (see also «Designs» at the previous page).

* Valid in case of **hollow low speed shaft** (with shrink disc or keyway).

▼ Oil filler plug
● Oil level plug
■ Oil drain plug

▽ Oil filler plug on opposite side (not in view)
▨ Oil level plug on opposite side (not in view)
⊘ Oil drain plug on opposite side (not in view)

2586-01.02

## 8.2 - Gear reducers R 3I

### Lubrication - Plug position and oil quantity

Oil quantity are approximate for provisioning and can vary according to the design and specific application. The exact quantity the gear reducer is to be filled with is definitely given by the level.

**B3**

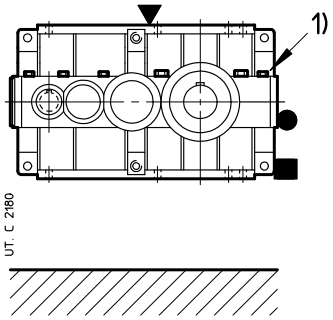


**B6**

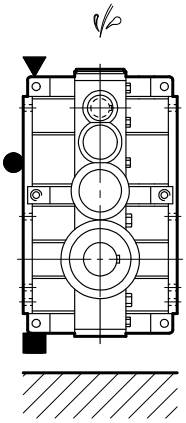

**B7**

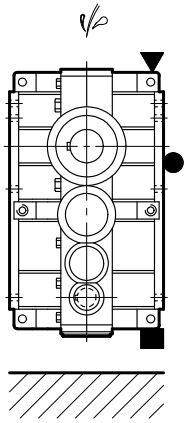

**V5**

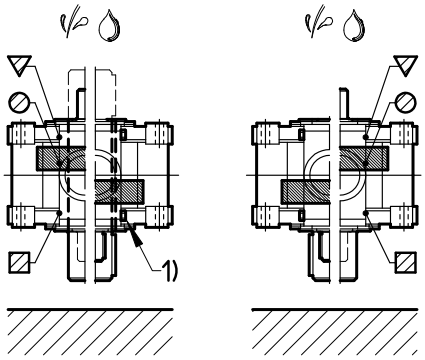


| | | | |
|---|---|---|---|
| UP1A<br>UP1D<br>UP1F<br>UP1G | UP1E<br>UP1H | UP1N | UP1M<br>UP1L |
| UP1A*<br>UP1D* | UP1M*<br>UP1L* | | |

**V6**

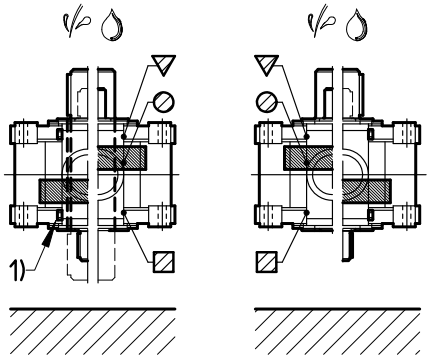


| | | | |
|---|---|---|---|
| UP1A<br>UP1D<br>UP1F<br>UP1G | UP1E<br>UP1H | UP1N | UP1M<br>UP1L |
| UP1A*<br>UP1D* | UP1M*<br>UP1L* | | |

| Size | Oil quantity [l] | | | | |
|---|---|---|---|---|---|
| | B3 | B6 | B7 | V5, V6 | |
| | | | | with low speed shaft on bottom | with low speed wheel on top |
| **4000, 4001** | 140 | 236 | 224 | 236 | 250 |
| **4500, 4501** | 140 | 236 | 224 | 236 | 250 |
| **5000, 5001** | 280 | 450 | 450 | 450 | 500 |
| **5600, 5601** | 280 | 450 | 450 | 450 | 500 |
| **6300, 6301** | 400 | 630 | 670 | 630 | 710 |
| **7101** | 630 | 950 | 1060 | 1000 | 1120 |
| **8001** | 1060 | 1800 | 1700 | 1800 | 1900 |



2586-01.02

# 8.3 - Gear reducers R 4I

## Dimensions

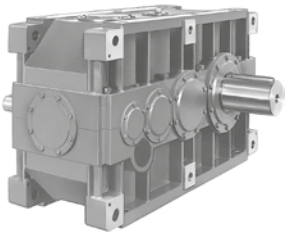

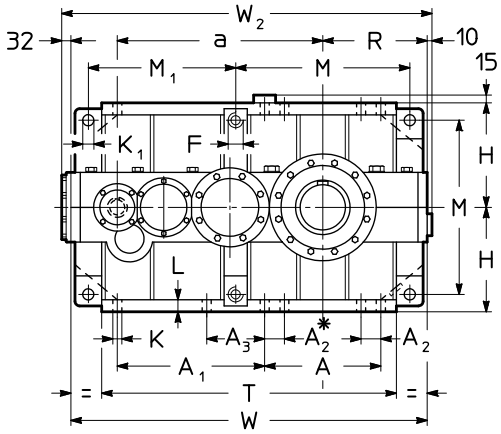


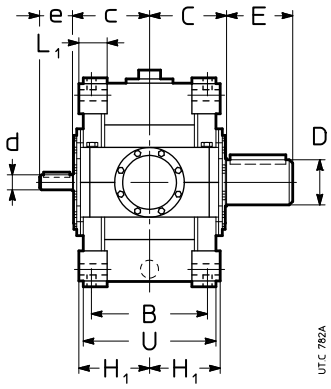


* For sizes ⩾ 6300.

| Size | a | A | $A_1$ / $M_1$ | $A_2$ | $A_3$ | B | C | c | F 1) | H h11 / R | $H_1$ h12 | K Ø | $K_1$ Ø H11 | L | $L_1$ | M | T | U | W | $W_2$ 2) | kg 3) |
|---|---|---|---|---|---|---|---|---|---|---|---|---|---|---|---|---|---|---|---|---|---|
| **4000**<br>**4001** | 900 | 505 | 625 | 90 | – | 500 | 330 | 325 | M45 | 450 | 296 | 39 | 48 | 52 | 116 | 750 | 1260 | 580 | 1525 | 1567 | 2360<br>2430 |
| **4500**<br>**4501** | 950 | 505 | 675 | 90 | – | 500 | 358 | 325 | M45 | 450 | 296 | 39 | 48 | 52 | 116 | 750 | 1310 | 580 | 1575 | 1617 | 2650<br>2720 |
| **5000**<br>**5001** | 1125 | 630 | 785 | 115 | – | 625 | 410 | 405 | M56 | 560 | 370 | 48 | 60 | 65 | 148 | 930 | 1575 | 725 | 1905 | 1947 | 4630<br>4740 |
| **5600**<br>**5601** | 1185 | 630 | 845 | 115 | – | 625 | 445 | 405 | M56 | 560 | 370 | 48 | 60 | 65 | 148 | 930 | 1635 | 725 | 1965 | 2007 | 5520<br>5640 |
| **6300**<br>**6301** | 1380 | 770 | 970 | 115 | – | 695 | 490 | 455 | M56 | 630 | 406 | 48 | 60 | 65 | 148 | 1070 | 1900 | 795 | 2230 | 2272 | 7730<br>7830 |
| **7101** | 1630 | 930 | 1228 | 115 | 590 | 843 | 601 | 540 | M56 | 710 | 481 | 48 | 66 | 71 | 185 | 1230 | 2279 | 943 | 2648 | 2676 | 13230 |
| **8001** | 1880 | 1008 | 1286 | 145 | 596 | 944 | 682 | 577 | M90 | 900 | 544 | 60 | 95 | 85 | 250 | 1574 | 2590 | 1064 | 3086 | 3114 | 20420 |

| Size | D Ø | E | d Ø 4) $i_N \leqslant 160$ | e | d Ø $i_N \geqslant 200$ | e |
|---|---|---|---|---|---|---|
| **4000**<br>**4001** | 190<br>200 | 280 | 55 | 110 | 48 | 110 |
| **4500**<br>**4501** | 210<br>220 | 300 | 55 | 110 | 48 | 110 |
| **5000**<br>**5001** | 240<br>250 | 330 | 70 | 140 | 55 | 110 |
| **5600**<br>**5601** | 270<br>280 | 380 | 70 | 140 | 55 | 110 |
| **6300**<br>**6301** | 300<br>320 | 430 | 75 | 140 | 60 | 140 |
| **7101** | 360 | 590 | 90 | 170 | – | – |
| **8001** | 400 | 660 | 110 | 210 | – | – |

1) Working length on thread 1,7 · F.
2) For mounting positions B6, B7, V5, V6, dimension $W_2$ increases by 20 for overall dimensions of filler plug.
3) Values valid for double extension low speed shaft end.
4) For size ⩽ 6301, the second high speed shaft end (UP1D, UP1G, UP1M) has the dimensions of high speed shaft end for $i_N \geqslant 200$.

## 8.3 - Gear reducers R 4I

### **Designs** (direction of rotation)

Solid low speed shaft (standard)

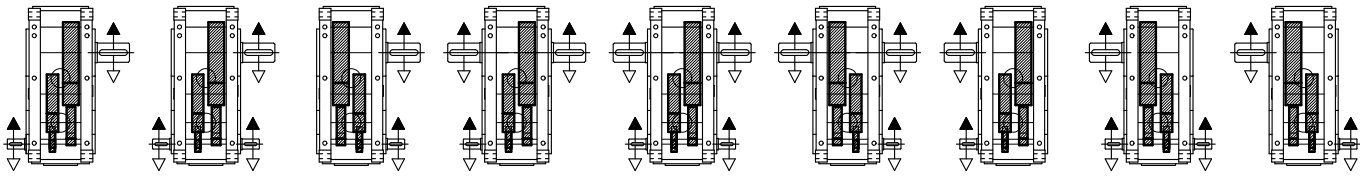

UP1A UP1D UP1E UP1F UP1G UP1H UP1N UP1M UP1L

Hollow low speed shaft with shrink disc on machine opposite side (on request)

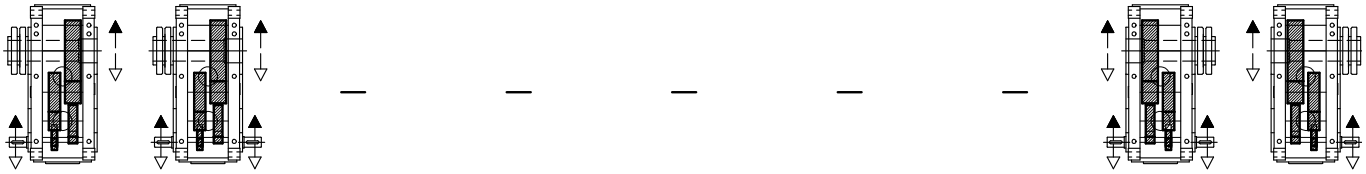

UP1A UP1D — — — — — UP1M UP1L

Hollow low speed shaft with shrink disc on machine side (on request)

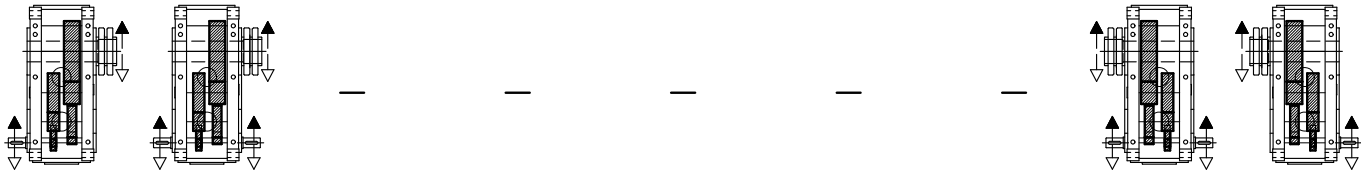

UP1A UP1D — — — — — UP1M UP1L

Hollow low speed shaft with keyway (on request)

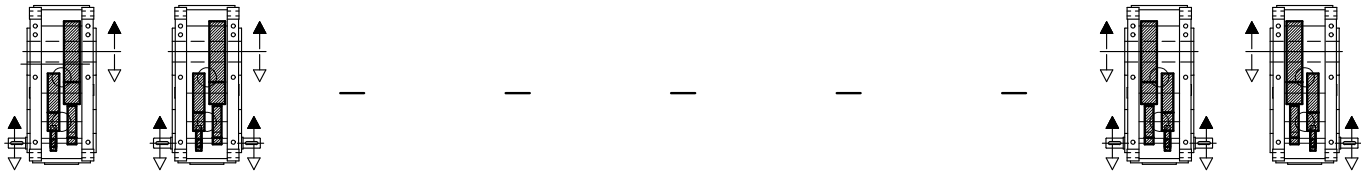

UP1A UP1D — — — — — UP1M UP1L

UT. C 2181

8

2586-01.02

## 8.3 - Gear reducers R 4I

### Mounting positions

Except specific needs, prefer mounting position B3 (see ch. 2).



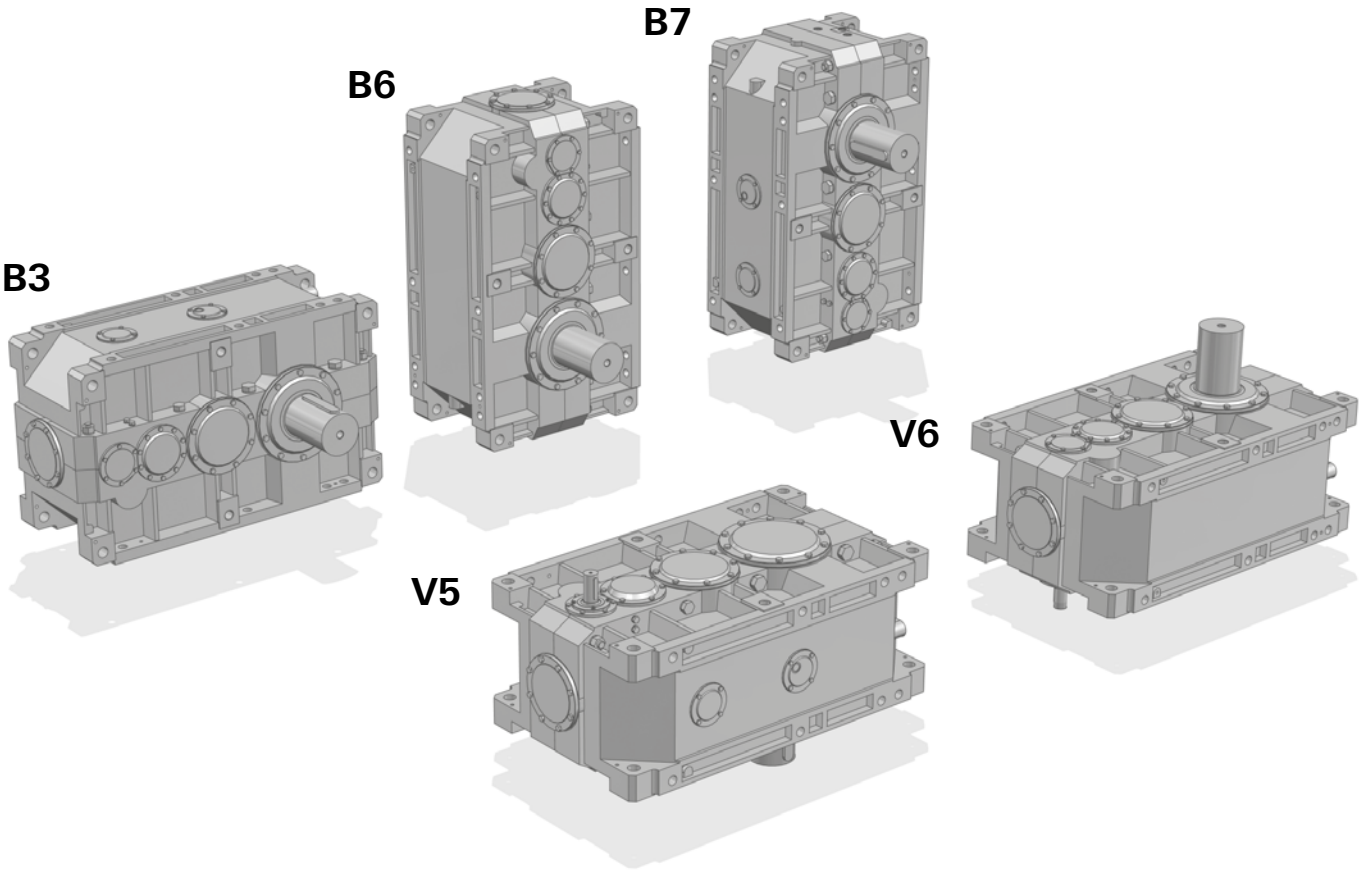


Possible high oil splash: for the corrective factor $f_{t3}$ of nominal thermal power $P_{tN}$ see ch. 4.

Possible bearing lubrication pump: consult us for verification.

1) Mounting position **B3** may be identified from the position of the screw-heads as arrowed. The same is valid for mounting positions V5 and V6 with double extension or hollow low speed shaft: in these cases, consider the **position of low speed wheel**, for the identification of correct mounting position (see also «Designs» at the previous page).

* Valid in case of **hollow low speed shaft** (with shrink disc or keyway).

▼ Oil filler plug
● Oil level plug
■ Oil drain plug

▽ Oil filler plug on opposite side (not in view)
▨ Oil level plug on opposite side (not in view)
⊘ Oil drain plug on opposite side (not in view)

2586-01.02

## 8.3 - Gear reducers R 4I

### Lubrication - Plug position and oil quantity

Oil quantity are approximate for provisioning and can vary according to the design and specific application. The exact quantity the gear reducer is to be filled with is definitely given by the level.

**B3**

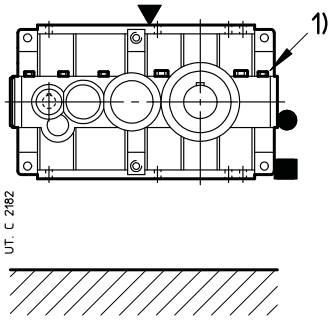


**B6**

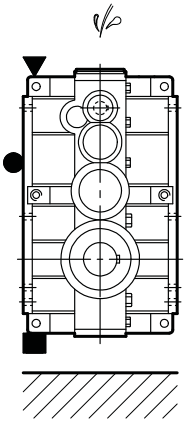

**B7**

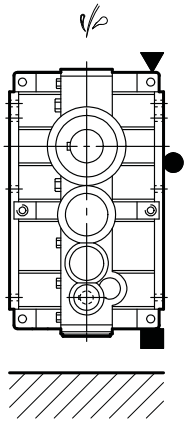

**V5**

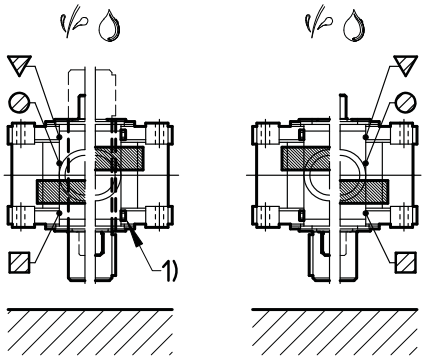


| | | | |
|---|---|---|---|
| UP1A<br>UP1D<br>UP1F<br>UP1G | UP1E<br>UP1H | UP1N | UP1M<br>UP1L |
| UP1A*<br>UP1D* | UP1M*<br>UP1L* | | |

**V6**

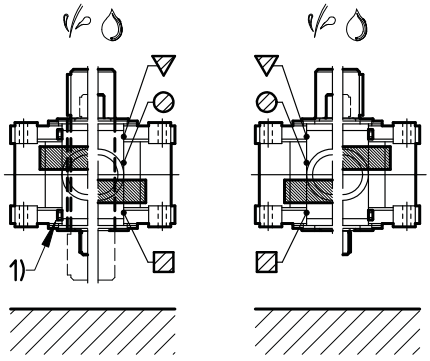


| | | | |
|---|---|---|---|
| UP1A<br>UP1D<br>UP1F<br>UP1G | UP1E<br>UP1H | UP1N | UP1M<br>UP1L |
| UP1A*<br>UP1D* | UP1M*<br>UP1L* | | |

| Size | Oil quantity [l] | | | | |
|---|---|---|---|---|---|
| | B3 | B6 | B7 | V5, V6 | |
| | | | | with low speed shaft on bottom | with low speed wheel on top |
| **4000, 4001** | 160 | 265 | 224 | 250 | 265 |
| **4500, 4501** | 160 | 265 | 224 | 250 | 265 |
| **5000, 5001** | 315 | 530 | 425 | 500 | 530 |
| **5600, 5601** | 315 | 530 | 425 | 500 | 530 |
| **6300, 6301** | 450 | 750 | 630 | 710 | 750 |
| **7101** | 750 | 1120 | 1060 | 1120 | 1120 |
| **8001** | 1180 | 2000 | 1700 | 1900 | 1900 |

Page intentionally left blank

# 9 - Selection tables
(bevel helical gear reducers)



2586-01.02

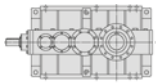

## $n_1$ = 1 800 min$^{-1}$

| Train of gears | | $n_{N2}$ min$^{-1}$ | Gear reducer size<br>$P_{N2}$ [kW]<br>$M_{N2}$ ($M_{2max}$) [kN m] | | | | | | | | | | | |
|---|---|---|---|---|---|---|---|---|---|---|---|---|---|---|
| | | | **4000** | **4001** | **4500** | **4501** | **5000** | **5001** | **5600** | **5601** | **6300** | **6301** | **7101** | **8001** |
| CI | **8** | 224 | 1770▲<br>**73** (140) | 1910▲<br>**79** (155) | 2260▲<br>**97** (195) | – | – | – | – | – | – | – | – | – |
| | **9** | 200 | 1710▲<br>**80** (145) | 1870▲<br>**88** (170) | 2020▲<br>**100** (190) | 2230▲<br>**110** (218) | – | – | – | – | – | – | – | – |
| | **10** | 180 | 1480▲<br>**80** (145) | 1670▲<br>**90** (170) | 1860▲<br>**100** (200) | 2050▲<br>**112** (206) | – | – | – | – | – | – | – | – |
| | **11,2** | 160 | 1340▲<br>**80** (150) | 1510▲<br>**90** (170) | 1620▲<br>**100** (195) | 1810▲<br>**112** (224) | – | – | – | – | – | – | – | – |
| | **12,5** | 140 | 1180▲<br>**80** (150) | 1270▲<br>**87** (175) | 1470▲<br>**100** (195) | 1640▲<br>**112** (195) | – | – | – | – | – | – | – | – |
| | **14** | 132 | 1060▲<br>**80** (140) | 1190▲<br>**90** (165) | 1280▲<br>**100** (200) | 1430▲<br>**112** (224) | – | – | – | – | – | – | – | – |
| | **16** | 112 | 927▲<br>**80** (150) | 989▲<br>**85** (165) | 1160▲<br>**100** (185) | 1260▲<br>**108** (212) | – | – | – | – | – | – | – | – |
| | **18** | 100 | 838▲<br>**80** (145) | 942▲<br>**90** (165) | 989▲<br>**98** (195) | – | – | – | – | – | – | – | – | – |
| C2I | **20** | 90 | 908▲<br>**95** (165) | 984▲<br>**103** (190) | 916▲<br>**100** (185) | 989▲<br>**108** (218) | – | – | – | – | – | – | – | – |
| | **22,4** | 80 | 824▲<br>**98** (165) | 899▲<br>**107** (190) | 953▲<br>**115** (224) | 1040▲<br>**125** (250) | 1610▲<br>**190** (325) | 1760▲<br>**207** (375) | – | – | – | – | – | – |
| | **25** | 71 | 730▲<br>**100** (160) | 803▲<br>**110** (185) | 877▲<br>**120** (224) | 958▲<br>**131** (257) | 1370▲<br>**185** (315) | 1500▲<br>**202** (365) | 1800▲<br>**243** (450) | 2040▲<br>**275** (515) | – | – | – | – |
| | **28** | 63 | 672▲<br>**100** (165) | 753▲<br>**112** (185) | 782▲<br>**123** (212) | 858▲<br>**135** (243) | 1290▲<br>**190** (325) | 1440▲<br>**212** (375) | 1580▲<br>**243** (425) | 1810▲<br>**278** (487) | 1980▲<br>**300** (600) | 2200▲<br>**335** (670) | – | – |
| | **31,5** | 56 | 584▲<br>**100** (165) | 654▲<br>**112** (185) | 731▲<br>**125** (230) | 807▲<br>**138** (265) | 1110▲<br>**188** (325) | 1260▲<br>**212** (375) | 1440▲<br>**243** (450) | 1660▲<br>**280** (515) | 1830▲<br>**320** (650) | 2020▲<br>**360** (730) | – | – |
| | **35,5** | 50 | 534▲<br>**100** (165) | 598▲<br>**112** (190) | 636▲<br>**125** (212) | 712▲<br>**140** (243) | 1020▲<br>**190** (335) | 1140▲<br>**212** (375) | 1260▲<br>**243** (425) | 1460▲<br>**280** (500) | 1730▲<br>**335** (630) | 1960▲<br>**380** (710) | – | – |
| | **40** | 45 | 463▲<br>**100** (165) | 519▲<br>**112** (190) | 580▲<br>**125** (230) | 650▲<br>**140** (265) | 895▲<br>**190** (335) | 999▲<br>**212** (375) | 1150▲<br>**243** (462) | 1320▲<br>**280** (530) | 1600▲<br>**350** (650) | 1800▲<br>**400** (750) | – | – |
| | **45** | 40 | 423<br>**100** (170) | 474<br>**112** (195) | 505▲<br>**125** (218) | 565▲<br>**140** (250) | 811▲<br>**190** (335) | 905▲<br>**212** (387) | 1000▲<br>**243** (437) | 1160▲<br>**280** (500) | 1480▲<br>**355** (650) | 1700▲<br>**412** (630) | – | – |
| | **50** | 35,5 | 367<br>**100** (170) | 411<br>**112** (195) | 460<br>**125** (236) | 515<br>**140** (272) | 710▲<br>**190** (335) | 792▲<br>**212** (387) | 908▲<br>**243** (475) | 1050▲<br>**280** (545) | 1280▲<br>**355** (670) | 1460▲<br>**412** (750) | – | – |
| | **56** | 31,5 | 334<br>**100** (170) | 374<br>**112** (195) | 400<br>**125** (224) | 448<br>**140** (257) | 639▲<br>**190** (345) | 714▲<br>**212** (387) | 796▲<br>**243** (450) | 917▲<br>**280** (515) | 1170▲<br>**355** (670) | 1340▲<br>**412** (630) | – | – |
| | **63** | 28 | 290<br>**100** (170) | 324<br>**112** (195) | 363<br>**125** (243) | 406<br>**140** (272) | 560▲<br>**190** (345) | 624▲<br>**212** (387) | 716▲<br>**243** (475) | 825▲<br>**280** (545) | 1020▲<br>**355** (670) | 1160▲<br>**412** (775) | – | – |
| | **71** | 25 | 267<br>**100** (175) | 299<br>**112** (200) | 316<br>**125** (224) | 353<br>**140** (257) | 512▲<br>**190** (355) | 571▲<br>**212** (400) | 627▲<br>**243** (450) | 723▲<br>**280** (515) | 917▲<br>**355** (650) | 1060▲<br>**412** (630) | – | – |
| | **80** | 22,4 | 232<br>**100** (175) | 260<br>**112** (200) | 286<br>**125** (243) | 321<br>**140** (280) | 448▲<br>**190** (355) | 499▲<br>**212** (400) | 573▲<br>**243** (487) | 660▲<br>**280** (545) | 801▲<br>**355** (690) | 913▲<br>**412** (775) | – | – |
| | **90** | 20 | 214<br>**100** (175) | 239<br>**112** (200) | 252<br>**125** (230) | 283<br>**140** (265) | 409▲<br>**190** (355) | 457▲<br>**212** (400) | 502▲<br>**243** (462) | 578▲<br>**280** (530) | 723▲<br>**355** (650) | 839▲<br>**412** (750) | – | – |
| | **100** | 18 | 185<br>**100** (175) | 208<br>**112** (200) | 229<br>**125** (243) | 257<br>**140** (280) | 358▲<br>**190** (355) | 400▲<br>**212** (400) | 458▲<br>**243** (487) | 528▲<br>**280** (545) | 659▲<br>**355** (600) | 767▲<br>**412** (690) | 1020▲<br>**550** (1090) | 1630▲<br>**925** (1800) |
| | **125** | 14 | – | – | 183<br>**125** (212) | 205<br>**140** (243) | – | – | 366▲<br>**243** (425) | 422▲<br>**280** (487) | – | – | – | – |
| C3I | **125** | 14 | 145<br>**100** (175) | 162<br>**112** (200) | 181<br>**125** (243) | 203<br>**140** (280) | 275<br>**190** (355) | 307<br>**212** (400) | 352<br>**243** (487) | 406<br>**280** (560) | 508<br>**355** (670) | 535<br>**381** (750) | 941▲<br>**650** (1250) | 1280▲<br>**925** (1800) |
| | **160** | 11,2 | 115<br>**100** (175) | 129<br>**112** (200) | 144<br>**125** (243) | 161<br>**140** (280) | 218<br>**190** (355) | 244<br>**212** (400) | 279<br>**243** (487) | 322<br>**280** (560) | 406<br>**355** (690) | 463<br>**412** (800) | 753▲<br>**650** (1250) | 1020▲<br>**925** (1800) |
| | **200** | 9 | 90,3<br>**100** (175) | 101<br>**112** (200) | 113<br>**125** (243) | 127<br>**140** (280) | 177<br>**190** (355) | 198<br>**212** (400) | 227<br>**243** (487) | 261<br>**280** (560) | 322<br>**355** (670) | 370<br>**412** (750) | 597<br>**650** (1250) | 812▲<br>**925** (1800) |
| | **250** | 7,1 | 71,2<br>**100** (175) | 79,8<br>**112** (200) | 89,2<br>**125** (243) | 99,9<br>**140** (280) | 140<br>**190** (355) | 156<br>**212** (400) | 179<br>**243** (487) | 206<br>**280** (560) | 258<br>**355** (690) | 294<br>**412** (800) | 471<br>**650** (1250) | 641▲<br>**925** (1800) |
| | **315** | 5,6 | 57,9<br>**100** (175) | 64,9<br>**112** (200) | 72,6<br>**125** (243) | 81,3<br>**140** (280) | 110<br>**190** (355) | 123<br>**212** (400) | 141<br>**243** (487) | 162<br>**280** (560) | 203<br>**355** (690) | 225<br>**400** (800) | 371<br>**650** (1250) | 505▲<br>**925** (1800) |

▲ Necessary forced lubrication with motor pump and possible heat exchanger (see ch. 6 and 12).

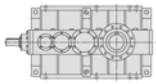

## $n_1$ = 1 500 min$^{-1}$

| Train of gears | | $n_{N2}$ min$^{-1}$ | Gear reducer size<br>$P_{N2}$ [kW]<br>$M_{N2}$ ($M_{2max}$) [kN m] | | | | | | | | | | | |
|---|---|---|---|---|---|---|---|---|---|---|---|---|---|---|
| | | | **4000** | **4001** | **4500** | **4501** | **5000** | **5001** | **5600** | **5601** | **6300** | **6301** | **7101** | **8001** |
| CI | **8** | 190 | 1520▲<br>**75** (145) | 1670▲<br>**82** (160) | 1920▲<br>**99** (200) | – | – | – | – | – | – | – | – | – |
| | **9** | 170 | 1510▲<br>**85** (150) | 1670▲<br>**94** (175) | 1780▲<br>**106** (195) | 1890▲<br>**113** (224) | – | – | – | – | – | – | – | – |
| | **10** | 150 | 1310▲<br>**85** (150) | 1470▲<br>**95** (175) | 1640▲<br>**106** (212) | 1800▲<br>**118** (212) | – | – | – | – | – | – | – | – |
| | **11,2** | 132 | 1190▲<br>**85** (155) | 1330▲<br>**95** (175) | 1430▲<br>**106** (200) | 1590▲<br>**118** (230) | – | – | – | – | – | – | – | – |
| | **12,5** | 118 | 1040<br>**85** (155) | 1130<br>**92** (175) | 1290▲<br>**106** (200) | 1440▲<br>**118** (200) | – | – | – | – | – | – | – | – |
| | **14** | 106 | 941<br>**85** (145) | 1050<br>**95** (165) | 1130<br>**106** (206) | 1220<br>**114** (230) | – | – | – | – | – | – | – | – |
| | **16** | 95 | 773<br>**80** (150) | 826<br>**86** (170) | 1030<br>**106** (190) | 1130<br>**117** (218) | – | – | – | – | – | – | – | – |
| | **18** | 85 | 742<br>**85** (150) | 826<br>**95** (170) | 839<br>**100** (200) | – | – | – | – | – | – | – | – | – |
| C2I | **20** | 75 | 796▲<br>**100** (170) | 860▲<br>**108** (195) | 809<br>**106** (190) | 839<br>**110** (218) | – | – | – | – | – | – | – | – |
| | **22,4** | 67 | 743▲<br>**106** (170) | 799▲<br>**114** (195) | 829▲<br>**120** (230) | 884▲<br>**128** (257) | 1410▲<br>**200** (335) | 1580▲<br>**224** (387) | – | – | – | – | – | – |
| | **25** | 60 | 644▲<br>**106** (165) | 717▲<br>**118** (185) | 768▲<br>**126** (230) | 853▲<br>**140** (265) | 1240▲<br>**200** (325) | 1350▲<br>**218** (375) | 1590▲<br>**257** (450) | 1790▲<br>**290** (530) | – | – | – | – |
| | **28** | 53 | 594<br>**106** (165) | 661<br>**118** (190) | 699▲<br>**132** (218) | 779▲<br>**147** (250) | 1130▲<br>**200** (335) | 1270▲<br>**224** (375) | 1390▲<br>**257** (425) | 1540▲<br>**285** (500) | 1730▲<br>**315** (615) | 1880▲<br>**344** (690) | – | – |
| | **31,5** | 47,5 | 516<br>**106** (165) | 574<br>**118** (190) | 643<br>**132** (230) | 731<br>**150** (265) | 989▲<br>**200** (335) | 1110▲<br>**224** (375) | 1270▲<br>**257** (462) | 1430▲<br>**290** (530) | 1620▲<br>**340** (650) | 1780▲<br>**380** (750) | – | – |
| | **35,5** | 42,5 | 472<br>**106** (170) | 525<br>**118** (195) | 559<br>**132** (218) | 636<br>**150** (250) | 898▲<br>**200** (335) | 1010▲<br>**224** (387) | 1110▲<br>**257** (437) | 1240▲<br>**286** (500) | 1530▲<br>**355** (650) | 1720▲<br>**400** (730) | – | – |
| | **40** | 37,5 | 409<br>**106** (170) | 456<br>**118** (195) | 511<br>**132** (236) | 580<br>**150** (272) | 785▲<br>**200** (335) | 880▲<br>**224** (387) | 1010▲<br>**257** (475) | 1130▲<br>**287** (545) | 1390▲<br>**365** (670) | 1550▲<br>**415** (775) | – | – |
| | **45** | 33,5 | 374<br>**106** (170) | 416<br>**118** (195) | 444<br>**132** (224) | 505<br>**150** (257) | 711<br>**200** (345) | 797<br>**224** (400) | 885▲<br>**257** (450) | 986▲<br>**286** (515) | 1260▲<br>**365** (670) | 1460▲<br>**425** (670) | 2360▲<br>**670** (1220) | 3250▲<br>**950** (1750) |
| | **50** | 30 | 325<br>**106** (170) | 361<br>**118** (195) | 405<br>**132** (243) | 460<br>**150** (272) | 623<br>**200** (345) | 697<br>**224** (400) | 800<br>**257** (475) | 899<br>**289** (545) | 1100▲<br>**365** (670) | 1260▲<br>**425** (775) | 2050▲<br>**670** (1250) | 2820▲<br>**950** (1750) |
| | **56** | 26,5 | 295<br>**106** (175) | 328<br>**118** (200) | 352<br>**132** (224) | 400<br>**150** (257) | 561<br>**200** (355) | 628<br>**224** (400) | 701<br>**257** (450) | 783<br>**287** (515) | 1000<br>**365** (670) | 1150▲<br>**425** (670) | 1850▲<br>**670** (1180) | 2550▲<br>**950** (1650) |
| | **63** | 23,6 | 256<br>**106** (175) | 285<br>**118** (200) | 319<br>**132** (243) | 363<br>**150** (280) | 491<br>**200** (355) | 550<br>**224** (400) | 631<br>**257** (487) | 712<br>**290** (560) | 871<br>**365** (690) | 996<br>**425** (775) | 1640▲<br>**670** (1250) | 2320▲<br>**950** (1800) |
| | **71** | 21,2 | 236<br>**106** (175) | 263<br>**118** (200) | 278<br>**132** (230) | 316<br>**150** (265) | 449<br>**200** (355) | 503<br>**224** (400) | 553<br>**257** (462) | 619<br>**288** (530) | 785<br>**365** (670) | 915<br>**425** (670) | 1480▲<br>**670** (1220) | 2100▲<br>**950** (1700) |
| | **80** | 19 | 205<br>**106** (175) | 228<br>**118** (200) | 252<br>**132** (243) | 286<br>**150** (280) | 393<br>**200** (355) | 440<br>**224** (400) | 505<br>**257** (487) | 569<br>**290** (545) | 687<br>**365** (690) | 785<br>**425** (775) | – | – |
| | **90** | 17 | 189<br>**106** (175) | 210<br>**118** (200) | 222<br>**132** (230) | 252<br>**150** (265) | 359<br>**200** (355) | 402<br>**224** (400) | 442<br>**257** (462) | 496<br>**288** (530) | 619<br>**365** (650) | 721<br>**425** (750) | – | – |
| | **100** | 15 | 164<br>**106** (175) | 182<br>**118** (200) | 202<br>**132** (243) | 229<br>**150** (280) | 314<br>**200** (355) | 352<br>**224** (400) | 404<br>**257** (487) | 455<br>**290** (560) | 565<br>**365** (615) | 659<br>**425** (710) | 916▲<br>**595** (1180) | 1390▲<br>**950** (1800) |
| | **125** | 11,8 | – | – | 161<br>**132** (212) | 183<br>**150** (243) | – | – | 323<br>**257** (425) | 364<br>**290** (487) | – | – | – | – |
| C3I | **125** | 11,8 | 128<br>**106** (175) | 142<br>**118** (200) | 160<br>**132** (243) | 169<br>**140** (280) | 242<br>**200** (355) | 271<br>**224** (400) | 294<br>**243** (487) | 338<br>**280** (560) | 435<br>**365** (690) | 469<br>**401** (775) | 809▲<br>**670** (1250) | 1100▲<br>**950** (1800) |
| | **160** | 9,5 | 101<br>**106** (175) | 113<br>**118** (200) | 127<br>**132** (243) | 141<br>**147** (280) | 192<br>**200** (355) | 215<br>**224** (400) | 246<br>**257** (487) | 268<br>**280** (560) | 348<br>**365** (690) | 398<br>**425** (800) | 647<br>**670** (1250) | 877▲<br>**950** (1800) |
| | **200** | 7,5 | 79,8<br>**106** (175) | 88,8<br>**118** (200) | 99,6<br>**132** (243) | 113<br>**150** (280) | 156<br>**200** (355) | 174<br>**224** (400) | 200<br>**257** (487) | 218<br>**280** (560) | 276<br>**365** (690) | 318<br>**425** (775) | 513<br>**670** (1250) | 695<br>**950** (1800) |
| | **250** | 6 | 62,9<br>**106** (175) | 70<br>**118** (200) | 78,5<br>**132** (243) | 89,2<br>**150** (280) | 123<br>**200** (355) | 137<br>**224** (400) | 158<br>**257** (487) | 178<br>**290** (560) | 221<br>**365** (690) | 252<br>**425** (800) | 404<br>**670** (1250) | 548<br>**950** (1800) |
| | **315** | 4,75 | 51,2<br>**106** (175) | 57<br>**118** (200) | 63,9<br>**132** (243) | 72,6<br>**150** (280) | 96,7<br>**200** (355) | 108<br>**224** (400) | 124<br>**257** (487) | 140<br>**290** (560) | 174<br>**365** (690) | 188<br>**403** (800) | 319<br>**670** (1250) | 432<br>**950** (1800) |

▲ Necessary forced lubrication with motor pump and possible heat exchanger (see ch. 6 and 12).



2586-01.02

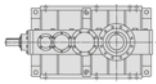

## $n_1$ = 1 200 min$^{-1}$

| Train of gears | | $n_{N2}$ min$^{-1}$ | Gear reducer size<br>$P_{N2}$ [kW]<br>$M_{N2}$ ($M_{2max}$) [kN m] | | | | | | | | | | | |
|---|---|---|---|---|---|---|---|---|---|---|---|---|---|---|
| | | | **4000** | **4001** | **4500** | **4501** | **5000** | **5001** | **5600** | **5601** | **6300** | **6301** | **7101** | **8001** |
| CI | **8** | 150 | 1260<br>**78** (145) | 1330<br>**82** (165) | 1550▲<br>**100** (200) | – | – | – | – | – | – | – | – | – |
| | **9** | 132 | 1220<br>**85** (150) | 1330<br>**94** (175) | 1430▲<br>**106** (200) | 1530▲<br>**114** (230) | – | – | – | – | – | – | – | – |
| | **10** | 118 | 1060<br>**85** (150) | 1180<br>**95** (175) | 1320<br>**106** (212) | 1450▲<br>**119** (212) | – | – | – | – | – | – | – | – |
| | **11,2** | 106 | 954<br>**85** (155) | 1070<br>**95** (175) | 1150<br>**106** (200) | 1280<br>**119** (230) | – | – | – | – | – | – | – | – |
| | **12,5** | 95 | 837<br>**85** (155) | 935<br>**95** (180) | 1040<br>**106** (200) | 1160<br>**119** (200) | – | – | – | – | – | – | – | – |
| | **14** | 85 | 756<br>**85** (145) | 845<br>**95** (170) | 909<br>**106** (206) | 986<br>**115** (230) | – | – | – | – | – | – | – | – |
| | **16** | 75 | 639<br>**83** (155) | 662<br>**86** (170) | 825<br>**106** (190) | 919<br>**119** (218) | – | – | – | – | – | – | – | – |
| | **18** | 67 | 596<br>**85** (150) | 662<br>**95** (170) | 677<br>**101** (200) | – | – | – | – | – | – | – | – | – |
| C2I | **20** | 60 | 639<br>**100** (170) | 692<br>**109** (195) | 650<br>**106** (195) | 677<br>**111** (224) | – | – | – | – | – | – | – | – |
| | **22,4** | 53 | 595<br>**106** (170) | 641<br>**114** (195) | 666<br>**120** (230) | 712<br>**129** (257) | 1130▲<br>**200** (335) | 1270▲<br>**225** (387) | – | – | – | – | 2850▲<br>**530** (1030) | 4740▲<br>**905** (1500) |
| | **25** | 47,5 | 516<br>**106** (165) | 575<br>**118** (190) | 617<br>**127** (230) | 686<br>**141** (265) | 990▲<br>**200** (325) | 1110▲<br>**225** (375) | 1280▲<br>**258** (462) | 1440▲<br>**290** (530) | – | – | 2850▲<br>**585** (1150) | 4500▲<br>**950** (1650) |
| | **28** | 42,5 | 476<br>**106** (165) | 530<br>**118** (190) | 561<br>**132** (218) | 625<br>**148** (250) | 905<br>**200** (335) | 1020<br>**225** (387) | 1120▲<br>**258** (437) | 1240▲<br>**285** (500) | 1390▲<br>**317** (615) | 1520▲<br>**346** (690) | 2850▲<br>**670** (1180) | 3910▲<br>**950** (1700) |
| | **31,5** | 37,5 | 413<br>**106** (165) | 460<br>**118** (190) | 516<br>**132** (236) | 586<br>**150** (272) | 792<br>**200** (335) | 890<br>**225** (387) | 1020<br>**258** (462) | 1150<br>**291** (530) | 1300▲<br>**342** (670) | 1430▲<br>**382** (775) | 2570▲<br>**670** (1150) | 3540▲<br>**950** (1600) |
| | **35,5** | 33,5 | 378<br>**106** (170) | 421<br>**118** (195) | 449<br>**132** (218) | 510<br>**150** (250) | 719<br>**200** (345) | 808<br>**225** (387) | 895<br>**258** (437) | 992<br>**286** (515) | 1230▲<br>**357** (650) | 1380▲<br>**402** (730) | 2280▲<br>**670** (1150) | 3220▲<br>**950** (1600) |
| | **40** | 30 | 328<br>**106** (170) | 365<br>**118** (195) | 410<br>**132** (236) | 466<br>**150** (272) | 629<br>**200** (345) | 707<br>**225** (387) | 810<br>**258** (475) | 904<br>**288** (545) | 1120<br>**366** (670) | 1250<br>**416** (775) | 2060▲<br>**670** (1120) | 2910▲<br>**950** (1650) |
| | **45** | 26,5 | 299<br>**106** (175) | 333<br>**118** (200) | 356<br>**132** (224) | 405<br>**150** (257) | 570<br>**200** (345) | 641<br>**225** (400) | 710<br>**258** (450) | 790<br>**287** (515) | 1020<br>**366** (670) | 1170<br>**426** (670) | 1900▲<br>**670** (1250) | 2600▲<br>**950** (1800) |
| | **50** | 23,6 | 260<br>**106** (175) | 289<br>**118** (200) | 325<br>**132** (243) | 369<br>**150** (280) | 499<br>**200** (345) | 560<br>**225** (400) | 642<br>**258** (487) | 722<br>**290** (560) | 882<br>**366** (690) | 1010<br>**426** (775) | 1650▲<br>**670** (1250) | 2260▲<br>**950** (1800) |
| | **56** | 21,2 | 236<br>**106** (175) | 263<br>**118** (200) | 282<br>**132** (230) | 321<br>**150** (265) | 449<br>**200** (355) | 505<br>**225** (400) | 563<br>**258** (462) | 627<br>**287** (530) | 805<br>**366** (670) | 925<br>**426** (670) | 1490▲<br>**670** (1180) | 2040▲<br>**950** (1700) |
| | **63** | 19 | 205<br>**106** (175) | 228<br>**118** (200) | 256<br>**132** (243) | 291<br>**150** (280) | 393<br>**200** (355) | 442<br>**225** (400) | 506<br>**258** (487) | 571<br>**291** (560) | 699<br>**366** (690) | 799<br>**426** (775) | 1320▲<br>**670** (1250) | 1860▲<br>**950** (1800) |
| | **71** | 17 | 189<br>**106** (175) | 210<br>**118** (200) | 223<br>**132** (230) | 253<br>**150** (265) | 359<br>**200** (355) | 404<br>**225** (400) | 444<br>**258** (462) | 496<br>**288** (530) | 631<br>**366** (670) | 733<br>**426** (670) | 1190▲<br>**670** (1220) | 1680▲<br>**950** (1700) |
| | **80** | 15 | 164<br>**106** (175) | 183<br>**118** (200) | 202<br>**132** (243) | 230<br>**150** (280) | 315<br>**200** (355) | 354<br>**225** (400) | 405<br>**258** (487) | 457<br>**291** (560) | 551<br>**366** (690) | 630<br>**426** (775) | – | – |
| | **90** | 13,2 | 151<br>**106** (175) | 168<br>**118** (200) | 178<br>**132** (230) | 203<br>**150** (265) | 288<br>**200** (355) | 323<br>**225** (400) | 355<br>**258** (462) | 398<br>**289** (530) | 497<br>**366** (650) | 578<br>**426** (750) | – | – |
| | **100** | 11,8 | 131<br>**106** (175) | 146<br>**118** (200) | 162<br>**132** (243) | 184<br>**150** (280) | 252<br>**200** (355) | 283<br>**225** (400) | 324<br>**258** (487) | 366<br>**291** (560) | 454<br>**366** (630) | 529<br>**426** (710) | 758<br>**615** (1220) | 1120▲<br>**950** (1800) |
| | **125** | 9,5 | – | – | 129<br>**132** (212) | 147<br>**150** (243) | – | – | 259<br>**258** (425) | 293<br>**291** (487) | – | – | – | – |
| C3I | **125** | 9,5 | 102<br>**106** (175) | 114<br>**118** (200) | 128<br>**132** (243) | 136<br>**141** (280) | 194<br>**200** (355) | 218<br>**225** (400) | 237<br>**245** (487) | 271<br>**280** (560) | 349<br>**366** (690) | 388<br>**415** (800) | 649<br>**670** (1250) | 878▲<br>**950** (1800) |
| | **160** | 7,5 | 81,2<br>**106** (175) | 90,4<br>**118** (200) | 101<br>**132** (243) | 115<br>**150** (280) | 153<br>**200** (355) | 172<br>**225** (400) | 198<br>**258** (487) | 215<br>**280** (560) | 280<br>**366** (690) | 319<br>**426** (800) | 519<br>**670** (1250) | 703<br>**950** (1800) |
| | **200** | 6 | 63,9<br>**106** (175) | 71,2<br>**118** (200) | 79,9<br>**132** (243) | 90,8<br>**150** (280) | 125<br>**200** (355) | 140<br>**225** (400) | 161<br>**258** (487) | 180<br>**289** (560) | 222<br>**366** (690) | 255<br>**426** (800) | 411<br>**670** (1250) | 557<br>**950** (1800) |
| | **250** | 4,75 | 50,4<br>**106** (175) | 56,1<br>**118** (200) | 63<br>**132** (243) | 71,6<br>**150** (280) | 98,3<br>**200** (355) | 110<br>**225** (400) | 127<br>**258** (487) | 143<br>**291** (560) | 177<br>**366** (690) | 202<br>**426** (800) | 324<br>**670** (1250) | 440<br>**950** (1800) |
| | **315** | 3,75 | 41<br>**106** (175) | 45,6<br>**118** (200) | 51,2<br>**132** (243) | 58,2<br>**150** (280) | 77,4<br>**200** (355) | 87<br>**225** (400) | 99,8<br>**258** (487) | 113<br>**291** (560) | 140<br>**366** (690) | 156<br>**416** (800) | 256<br>**670** (1250) | 347<br>**950** (1800) |

▲ Necessary forced lubrication with motor pump and possible heat exchanger (see ch. 6 and 12).



2586-01.02

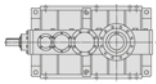

## $n_1$ = 1 000 min$^{-1}$

| Train of gears | i | $n_{N2}$ min$^{-1}$ | Gear reducer size<br>$P_{N2}$ [kW]<br>$M_{N2}$ ($M_{2max}$) [kN m] | | | | | | | | | | | |
|---|---|---|---|---|---|---|---|---|---|---|---|---|---|---|
| | | | **4000** | **4001** | **4500** | **4501** | **5000** | **5001** | **5600** | **5601** | **6300** | **6301** | **7101** | **8001** |
| CI | **8** | 125 | 1110<br>**83** (150) | 1120<br>**83** (165) | 1320<br>**102** (206) | – | – | – | – | – | – | – | – | – |
| | **9** | 112 | 1020<br>**86** (155) | 1110<br>**94** (180) | 1210<br>**107** (200) | 1300<br>**116** (230) | – | – | – | – | – | – | – | – |
| | **10** | 100 | 888<br>**86** (155) | 992<br>**96** (180) | 1110<br>**107** (212) | 1220<br>**120** (218) | – | – | – | – | – | – | – | – |
| | **11,2** | 90 | 803<br>**86** (160) | 897<br>**96** (180) | 965<br>**107** (206) | 1070<br>**120** (236) | – | – | – | – | – | – | – | – |
| | **12,5** | 80 | 704<br>**86** (160) | 787<br>**96** (180) | 875<br>**107** (206) | 975<br>**120** (206) | – | – | – | – | – | – | – | – |
| | **14** | 71 | 636<br>**86** (150) | 711<br>**96** (170) | 765<br>**107** (212) | 837<br>**118** (236) | – | – | – | – | – | – | – | – |
| | **16** | 63 | 553<br>**86** (155) | 559<br>**87** (175) | 694<br>**107** (195) | 773<br>**120** (224) | – | – | – | – | – | – | – | – |
| | **18** | 56 | 502<br>**86** (150) | 553<br>**95** (175) | 575<br>**103** (206) | – | – | – | – | – | – | – | – | – |
| C2I | **20** | 50 | 537<br>**101** (170) | 582<br>**110** (200) | 547<br>**107** (195) | 575<br>**113** (224) | – | – | – | – | – | – | – | – |
| | **22,4** | 45 | 497<br>**106** (170) | 537<br>**115** (200) | 559<br>**121** (236) | 602<br>**131** (257) | 945<br>**201** (345) | 1070<br>**227** (400) | – | – | – | – | 2540▲<br>**565** (1060) | 4150▲<br>**950** (1550) |
| | **25** | 40 | 431<br>**106** (165) | 480<br>**118** (190) | 519<br>**128** (236) | 578<br>**142** (272) | 827<br>**201** (335) | 936<br>**227** (387) | 1070<br>**260** (462) | 1200<br>**291** (530) | – | – | 2540▲<br>**625** (1150) | 3770▲<br>**955** (1700) |
| | **28** | 35,5 | 397<br>**106** (170) | 443<br>**118** (195) | 470<br>**133** (218) | 525<br>**149** (250) | 756<br>**201** (345) | 856<br>**227** (387) | 939<br>**260** (437) | 1030<br>**286** (515) | 1180<br>**322** (630) | 1280<br>**349** (690) | 2380▲<br>**675** (1220) | 3270▲<br>**955** (1750) |
| | **31,5** | 31,5 | 345<br>**106** (170) | 384<br>**118** (195) | 432<br>**133** (236) | 491<br>**151** (272) | 662<br>**201** (345) | 749<br>**227** (387) | 856<br>**260** (475) | 961<br>**292** (545) | 1100<br>**346** (670) | 1200<br>**385** (775) | 2150▲<br>**675** (1150) | 2960▲<br>**955** (1650) |
| | **35,5** | 28 | 316<br>**106** (175) | 352<br>**118** (200) | 376<br>**133** (224) | 427<br>**151** (257) | 601<br>**201** (345) | 680<br>**227** (400) | 751<br>**260** (450) | 829<br>**287** (515) | 1030<br>**361** (670) | 1160<br>**406** (750) | 1910▲<br>**675** (1150) | 2690▲<br>**955** (1650) |
| | **40** | 25 | 274<br>**106** (175) | 305<br>**118** (200) | 343<br>**133** (243) | 390<br>**151** (280) | 525<br>**201** (345) | 595<br>**227** (400) | 680<br>**260** (487) | 758<br>**290** (560) | 939<br>**369** (690) | 1050<br>**419** (800) | 1720▲<br>**675** (1150) | 2430▲<br>**955** (1650) |
| | **45** | 22,4 | 250<br>**106** (175) | 279<br>**118** (200) | 298<br>**133** (230) | 339<br>**151** (265) | 476<br>**201** (355) | 539<br>**227** (400) | 596<br>**260** (462) | 660<br>**287** (530) | 853<br>**369** (670) | 982<br>**428** (670) | 1590<br>**675** (1250) | 2180▲<br>**955** (1800) |
| | **50** | 20 | 217<br>**106** (175) | 242<br>**118** (200) | 272<br>**133** (243) | 309<br>**151** (280) | 417<br>**201** (355) | 471<br>**227** (400) | 539<br>**260** (487) | 606<br>**292** (560) | 741<br>**369** (690) | 843<br>**428** (775) | 1380<br>**675** (1250) | 1890▲<br>**955** (1800) |
| | **56** | 18 | 197<br>**106** (175) | 220<br>**118** (200) | 237<br>**133** (230) | 269<br>**151** (265) | 375<br>**201** (355) | 425<br>**227** (400) | 473<br>**260** (462) | 524<br>**288** (530) | 676<br>**369** (670) | 775<br>**428** (690) | 1240<br>**675** (1220) | 1710▲<br>**955** (1700) |
| | **63** | 16 | 171<br>**106** (175) | 191<br>**118** (200) | 214<br>**133** (243) | 244<br>**151** (280) | 328<br>**201** (355) | 372<br>**227** (400) | 425<br>**260** (487) | 479<br>**293** (560) | 587<br>**369** (690) | 669<br>**428** (775) | 1100<br>**675** (1250) | 1560▲<br>**955** (1800) |
| | **71** | 14 | 158<br>**106** (175) | 176<br>**118** (200) | 186<br>**133** (230) | 212<br>**151** (265) | 300<br>**201** (355) | 340<br>**227** (400) | 373<br>**260** (462) | 414<br>**289** (530) | 530<br>**369** (690) | 614<br>**428** (670) | 996<br>**675** (1220) | 1410▲<br>**955** (1700) |
| | **80** | 12,5 | 137<br>**106** (175) | 153<br>**118** (200) | 169<br>**133** (243) | 192<br>**151** (280) | 263<br>**201** (355) | 297<br>**227** (400) | 340<br>**260** (487) | 384<br>**293** (560) | 463<br>**369** (690) | 527<br>**428** (800) | – | – |
| | **90** | 11,2 | 126<br>**106** (175) | 141<br>**118** (200) | 149<br>**133** (230) | 170<br>**151** (265) | 240<br>**201** (355) | 272<br>**227** (400) | 298<br>**260** (462) | 332<br>**289** (530) | 418<br>**369** (650) | 484<br>**428** (750) | – | – |
| | **100** | 10 | 110<br>**106** (175) | 122<br>**118** (200) | 135<br>**133** (243) | 154<br>**151** (280) | 210<br>**201** (355) | 238<br>**227** (400) | 272<br>**260** (487) | 307<br>**293** (560) | 381<br>**369** (650) | 443<br>**428** (730) | 676<br>**660** (1250) | 935<br>**955** (1800) |
| | **125** | 8 | – | – | 108<br>**133** (212) | 123<br>**151** (243) | – | – | 218<br>**260** (425) | 245<br>**293** (487) | – | – | – | – |
| C3I | **125** | 8 | 85,6<br>**106** (175) | 95,3<br>**118** (200) | 107<br>**133** (243) | 121<br>**151** (280) | 162<br>**201** (355) | 183<br>**227** (400) | 209<br>**260** (487) | 226<br>**280** (560) | 293<br>**369** (690) | 327<br>**419** (800) | 543<br>**675** (1250) | 735<br>**955** (1800) |
| | **160** | 6,3 | 67,8<br>**106** (175) | 75,6<br>**118** (200) | 85<br>**133** (243) | 96,6<br>**151** (280) | 128<br>**201** (355) | 145<br>**227** (400) | 166<br>**260** (487) | 181<br>**284** (560) | 235<br>**369** (690) | 267<br>**428** (800) | 434<br>**675** (1250) | 588<br>**955** (1800) |
| | **200** | 5 | 53,4<br>**106** (175) | 59,5<br>**118** (200) | 66,9<br>**133** (243) | 76<br>**151** (280) | 104<br>**201** (355) | 118<br>**227** (400) | 135<br>**260** (487) | 152<br>**293** (560) | 186<br>**369** (690) | 214<br>**428** (800) | 344<br>**675** (1250) | 466<br>**955** (1800) |
| | **250** | 4 | 42,1<br>**106** (175) | 46,9<br>**118** (200) | 52,7<br>**133** (243) | 60<br>**151** (280) | 82,1<br>**201** (355) | 92,9<br>**227** (400) | 106<br>**260** (487) | 120<br>**293** (560) | 149<br>**369** (690) | 169<br>**428** (800) | 272<br>**675** (1250) | 368<br>**955** (1800) |
| | **315** | 3,15 | 34,2<br>**106** (175) | 38,1<br>**118** (200) | 42,9<br>**133** (243) | 48,8<br>**151** (280) | 64,7<br>**201** (355) | 73,2<br>**227** (400) | 83,7<br>**260** (487) | 94,4<br>**293** (560) | 117<br>**369** (690) | 134<br>**428** (800) | 214<br>**675** (1250) | 290<br>**955** (1800) |

▲ Necessary forced lubrication with motor pump and possible heat exchanger (see ch. 6 and 12).



2586-01.02

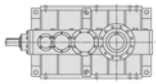

## $n_1$ = 750 min$^{-1}$

| Train of gears | | $n_{N2}$ min$^{-1}$ | Gear reducer size<br>$P_{N2}$ [kW]<br>$M_{N2}$ ($M_{2max}$) [kN m] | | | | | | | | | | | |
|---|---|---|---|---|---|---|---|---|---|---|---|---|---|---|
| | | | **4000** | **4001** | **4500** | **4501** | **5000** | **5001** | **5600** | **5601** | **6300** | **6301** | **7101** | **8001** |
| CI | **8** | 95 | 839<br>**83** (150) | 869<br>**86** (170) | 1020<br>**105** (212) | – | – | – | – | – | – | – | – | – |
| | **9** | 85 | 779<br>**87** (160) | 839<br>**94** (185) | 917<br>**109** (206) | 1000<br>**119** (236) | – | – | – | – | – | – | – | – |
| | **10** | 75 | 676<br>**87** (160) | 755<br>**98** (185) | 843<br>**109** (218) | 927<br>**121** (224) | – | – | – | – | – | – | – | – |
| | **11,2** | 67 | 611<br>**87** (165) | 682<br>**98** (185) | 734<br>**109** (212) | 818<br>**121** (243) | – | – | – | – | – | – | – | – |
| | **12,5** | 60 | 536<br>**87** (165) | 598<br>**98** (185) | 666<br>**109** (212) | 742<br>**121** (212) | – | – | – | – | – | – | – | – |
| | **14** | 53 | 484<br>**87** (155) | 541<br>**98** (175) | 581<br>**109** (212) | 646<br>**121** (243) | – | – | – | – | – | – | – | – |
| | **16** | 47,5 | 416<br>**86** (160) | 431<br>**89** (180) | 528<br>**109** (200) | 588<br>**121** (230) | – | – | – | – | – | – | – | – |
| | **18** | 42,5 | 382<br>**87** (155) | 416<br>**95** (180) | 443<br>**105** (212) | – | – | – | – | – | – | – | – | – |
| C2I | **20** | 37,5 | 407<br>**102** (175) | 444<br>**111** (200) | 416<br>**109** (200) | 443<br>**116** (230) | – | – | – | – | – | – | – | – |
| | **22,4** | 33,5 | 374<br>**107** (175) | 406<br>**116** (200) | 425<br>**123** (243) | 461<br>**133** (265) | 712<br>**201** (355) | 814<br>**230** (400) | – | – | – | – | 2110<br>**625** (1090) | 3120<br>**955** (1550) |
| | **25** | 30 | 324<br>**107** (170) | 362<br>**119** (195) | 394<br>**129** (243) | 441<br>**145** (272) | 623<br>**201** (345) | 712<br>**230** (400) | 812<br>**263** (475) | 902<br>**292** (545) | – | – | 2070<br>**680** (1180) | 2850<br>**960** (1750) |
| | **28** | 26,5 | 299<br>**107** (175) | 333<br>**119** (200) | 355<br>**134** (224) | 398<br>**150** (257) | 569<br>**201** (355) | 651<br>**230** (400) | 712<br>**263** (450) | 778<br>**287** (515) | 905<br>**330** (650) | 971<br>**354** (710) | 1800<br>**680** (1250) | 2460<br>**960** (1800) |
| | **31,5** | 23,6 | 260<br>**107** (175) | 289<br>**119** (200) | 326<br>**134** (243) | 372<br>**152** (280) | 498<br>**201** (355) | 570<br>**230** (400) | 649<br>**263** (487) | 723<br>**293** (560) | 838<br>**352** (690) | 913<br>**390** (775) | 1630<br>**680** (1180) | 2230<br>**960** (1700) |
| | **35,5** | 21,2 | 238<br>**107** (175) | 265<br>**119** (200) | 284<br>**134** (230) | 323<br>**152** (265) | 452<br>**201** (355) | 517<br>**230** (400) | 569<br>**263** (462) | 624<br>**288** (530) | 787<br>**366** (690) | 887<br>**412** (775) | 1440<br>**680** (1180) | 2030<br>**960** (1700) |
| | **40** | 19 | 206<br>**107** (175) | 230<br>**119** (200) | 259<br>**134** (243) | 295<br>**152** (280) | 396<br>**201** (355) | 452<br>**230** (400) | 516<br>**263** (487) | 575<br>**293** (560) | 713<br>**374** (690) | 793<br>**424** (800) | 1300<br>**680** (1180) | 1840<br>**960** (1700) |
| | **45** | 17 | 188<br>**107** (175) | 210<br>**119** (200) | 225<br>**134** (230) | 257<br>**152** (265) | 358<br>**201** (355) | 410<br>**230** (400) | 452<br>**263** (462) | 496<br>**288** (530) | 646<br>**373** (690) | 742<br>**431** (690) | 1200<br>**680** (1250) | 1650<br>**960** (1800) |
| | **50** | 15 | 163<br>**107** (175) | 182<br>**119** (200) | 205<br>**134** (243) | 234<br>**152** (280) | 314<br>**201** (355) | 359<br>**230** (400) | 409<br>**263** (487) | 458<br>**294** (560) | 562<br>**374** (690) | 637<br>**431** (775) | 1040<br>**680** (1250) | 1430<br>**960** (1800) |
| | **56** | 13,2 | 148<br>**107** (175) | 165<br>**119** (200) | 179<br>**134** (230) | 203<br>**152** (265) | 283<br>**201** (355) | 323<br>**230** (400) | 358<br>**263** (462) | 394<br>**289** (530) | 513<br>**374** (690) | 585<br>**431** (690) | 941<br>**680** (1220) | 1290<br>**960** (1700) |
| | **63** | 11,8 | 129<br>**107** (175) | 144<br>**119** (200) | 162<br>**134** (243) | 184<br>**152** (280) | 247<br>**201** (355) | 283<br>**230** (400) | 322<br>**263** (487) | 362<br>**295** (560) | 446<br>**374** (690) | 505<br>**431** (800) | 833<br>**680** (1250) | 1180<br>**960** (1800) |
| | **71** | 10,6 | 119<br>**107** (175) | 132<br>**119** (200) | 141<br>**134** (230) | 160<br>**152** (265) | 226<br>**201** (355) | 259<br>**230** (400) | 283<br>**263** (462) | 312<br>**290** (530) | 402<br>**374** (690) | 464<br>**431** (690) | 752<br>**680** (1220) | 1060<br>**960** (1700) |
| | **80** | 9,5 | 103<br>**107** (175) | 115<br>**119** (200) | 128<br>**134** (243) | 146<br>**152** (280) | 198<br>**201** (355) | 226<br>**230** (400) | 258<br>**263** (487) | 291<br>**296** (560) | 351<br>**374** (690) | 398<br>**431** (800) | – | – |
| | **90** | 8,5 | 95<br>**107** (175) | 106<br>**119** (200) | 113<br>**134** (230) | 128<br>**152** (265) | 181<br>**201** (355) | 207<br>**230** (400) | 226<br>**263** (462) | 250<br>**290** (530) | 317<br>**374** (650) | 366<br>**431** (750) | – | – |
| | **100** | 7,5 | 82,5<br>**107** (175) | 91,9<br>**119** (200) | 102<br>**134** (243) | 116<br>**152** (280) | 158<br>**201** (355) | 181<br>**230** (400) | 206<br>**263** (487) | 233<br>**296** (560) | 289<br>**374** (670) | 334<br>**431** (750) | 523<br>**680** (1250) | 706<br>**960** (1800) |
| | **125** | 6 | – | – | 81,8<br>**134** (212) | 93,1<br>**152** (243) | – | – | 165<br>**263** (425) | 186<br>**296** (487) | – | – | – | – |
| C3I | **125** | 6 | 64,4<br>**107** (175) | 71,8<br>**119** (200) | 81<br>**134** (243) | 92,2<br>**152** (280) | 122<br>**201** (355) | 139<br>**230** (400) | 159<br>**263** (487) | 176<br>**291** (560) | 223<br>**374** (690) | 246<br>**420** (800) | 410<br>**680** (1250) | 555<br>**960** (1800) |
| | **160** | 4,75 | 51,1<br>**107** (175) | 56,9<br>**119** (200) | 64,2<br>**134** (243) | 73,1<br>**152** (280) | 96,5<br>**201** (355) | 110<br>**230** (400) | 126<br>**263** (487) | 142<br>**296** (560) | 178<br>**374** (690) | 202<br>**431** (800) | 328<br>**680** (1250) | 444<br>**960** (1800) |
| | **200** | 3,75 | 40,2<br>**107** (175) | 44,8<br>**119** (200) | 50,5<br>**134** (243) | 57,5<br>**152** (280) | 78,4<br>**201** (355) | 89,7<br>**230** (400) | 102<br>**263** (487) | 115<br>**296** (560) | 141<br>**374** (690) | 161<br>**431** (800) | 260<br>**680** (1250) | 352<br>**960** (1800) |
| | **250** | 3 | 31,7<br>**107** (175) | 35,3<br>**119** (200) | 39,8<br>**134** (243) | 45,3<br>**152** (280) | 61,8<br>**201** (355) | 70,7<br>**230** (400) | 80,6<br>**263** (487) | 90,9<br>**296** (560) | 113<br>**374** (690) | 128<br>**431** (800) | 205<br>**680** (1250) | 278<br>**960** (1800) |
| | **315** | 2,36 | 25,8<br>**107** (175) | 28,7<br>**119** (200) | 32,4<br>**134** (243) | 36,9<br>**152** (280) | 48,7<br>**201** (355) | 55,7<br>**230** (400) | 63,5<br>**263** (487) | 71,6<br>**296** (560) | 89,1<br>**374** (690) | 101<br>**431** (800) | 162<br>**680** (1250) | 219<br>**960** (1800) |



2586-01.02

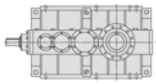

## $n_1 \leqslant 90$ min$^{-1}$

| Train of gears | | $n_{N2}$ min$^{-1}$ | Gear reducer size<br>$P_{N2}$ [kW]<br>$M_{N2}$ ($M_{2max}$) [kN m] | | | | | | | | | | | |
|---|---|---|---|---|---|---|---|---|---|---|---|---|---|---|
| | | | **4000** | **4001** | **4500** | **4501** | **5000** | **5001** | **5600** | **5601** | **6300** | **6301** | **7101** | **8001** |
| CI | **8** | 11,2 | 103<br>**85** (160) | 111<br>**91** (185) | 129<br>**111** (224) | – | – | – | – | – | – | – | – | – |
| | **9** | 10 | 101<br>**95** (175) | 107<br>**100** (200) | 118<br>**117** (230) | 129<br>**128** (257) | – | – | – | – | – | – | – | – |
| | **10** | 9 | 88,1<br>**95** (175) | 98,3<br>**106** (200) | 110<br>**118** (236) | 118<br>**129** (236) | – | – | – | – | – | – | – | – |
| | **11,2** | 8 | 79,6<br>**95** (175) | 88,8<br>**106** (195) | 95,3<br>**118** (230) | 107<br>**132** (265) | – | – | – | – | – | – | – | – |
| | **12,5** | 7,1 | 69,8<br>**95** (175) | 77,7<br>**106** (200) | 86,5<br>**118** (224) | 96,8<br>**132** (224) | – | – | – | – | – | – | – | – |
| | **14** | 6,3 | 63,1<br>**95** (165) | 70,4<br>**106** (190) | 75,6<br>**118** (230) | 82<br>**128** (257) | – | – | – | – | – | – | – | – |
| | **16** | 5,6 | 51<br>**88** (170) | 54,5<br>**94** (190) | 68,6<br>**118** (212) | 76,7<br>**132** (243) | – | – | – | – | – | – | – | – |
| | **18** | 5 | 49,7<br>**95** (165) | 51<br>**97** (190) | 56,1<br>**111** (224) | – | – | – | – | – | – | – | – | – |
| C2I | **20** | 4,5 | 52,1<br>**109** (180) | 58,3<br>**122** (206) | 51<br>**111** (212) | 55,9<br>**122** (243) | – | – | – | – | – | – | – | – |
| | **22,4** | 4 | 45,8<br>**109** (180) | 51,3<br>**122** (206) | 54,7<br>**132** (243) | 60,9<br>**147** (280) | 87,3<br>**206** (365) | 106<br>**250** (412) | – | – | – | – | 288<br>**710** (1150) | 386<br>**985** (1650) |
| | **25** | 3,55 | 39,8<br>**109** (175) | 44,5<br>**122** (200) | 51,2<br>**140** (243) | 58,5<br>**160** (280) | 76,4<br>**206** (355) | 92,7<br>**250** (400) | 104<br>**280** (487) | 112<br>**303** (560) | – | – | 260<br>**710** (1250) | 355<br>**1000** (1800) |
| | **28** | 3,15 | 36,7<br>**109** (175) | 41<br>**122** (200) | 44,5<br>**140** (230) | 50,9<br>**160** (265) | 69,8<br>**206** (355) | 84,8<br>**250** (400) | 91<br>**280** (462) | 98,3<br>**302** (530) | 116<br>**353** (690) | 127<br>**385** (775) | 226<br>**710** (1250) | 308<br>**1000** (1800) |
| | **31,5** | 2,8 | 31,8<br>**109** (175) | 35,6<br>**122** (200) | 40,9<br>**140** (243) | 46,8<br>**160** (280) | 61,1<br>**206** (355) | 74,2<br>**250** (400) | 83,1<br>**280** (487) | 92,5<br>**312** (560) | 111<br>**387** (690) | 116<br>**414** (800) | 204<br>**710** (1220) | 279<br>**1000** (1700) |
| | **35,5** | 2,5 | 29,1<br>**109** (175) | 32,6<br>**122** (200) | 35,6<br>**140** (230) | 40,7<br>**160** (265) | 55,5<br>**206** (355) | 67,3<br>**250** (400) | 72,8<br>**280** (462) | 81<br>**311** (530) | 103<br>**400** (690) | 116<br>**450** (800) | 180<br>**710** (1220) | 253<br>**1000** (1700) |
| | **40** | 2,24 | 25,3<br>**109** (175) | 28,3<br>**122** (200) | 32,5<br>**140** (243) | 37,2<br>**160** (280) | 48,5<br>**206** (355) | 58,9<br>**250** (400) | 66<br>**280** (487) | 74,2<br>**315** (560) | 91,5<br>**400** (690) | 101<br>**450** (800) | 163<br>**710** (1250) | 229<br>**1000** (1800) |
| | **45** | 2 | 23,1<br>**109** (175) | 25,8<br>**122** (200) | 28,3<br>**140** (230) | 32,3<br>**160** (265) | 44<br>**206** (355) | 53,4<br>**250** (400) | 57,8<br>**280** (462) | 65,1<br>**315** (530) | 83,1<br>**400** (690) | 92,9<br>**450** (800) | 150<br>**710** (1250) | 205<br>**1000** (1800) |
| | **50** | 1,8 | 20<br>**109** (175) | 22,4<br>**122** (200) | 25,8<br>**140** (243) | 29,4<br>**160** (280) | 38,5<br>**206** (355) | 46,7<br>**250** (400) | 52,3<br>**280** (487) | 58,8<br>**315** (560) | 72,2<br>**400** (690) | 79,8<br>**450** (800) | 130<br>**710** (1250) | 178<br>**1000** (1800) |
| | **56** | 1,6 | 18,2<br>**109** (175) | 20,4<br>**122** (200) | 22,4<br>**140** (230) | 25,6<br>**160** (265) | 34,7<br>**206** (355) | 42,1<br>**250** (400) | 45,8<br>**280** (462) | 51,6<br>**315** (530) | 65,9<br>**400** (690) | 73,3<br>**450** (800) | 118<br>**710** (1220) | 161<br>**1000** (1700) |
| | **63** | 1,4 | 15,8<br>**109** (175) | 17,7<br>**122** (200) | 20,3<br>**140** (243) | 23,2<br>**160** (280) | 30,3<br>**206** (355) | 36,8<br>**250** (400) | 41,2<br>**280** (487) | 46,4<br>**315** (560) | 57,3<br>**400** (690) | 63,3<br>**450** (800) | 104<br>**710** (1250) | 147<br>**1000** (1800) |
| | **71** | 1,25 | 14,6<br>**109** (175) | 16,3<br>**122** (200) | 17,7<br>**140** (230) | 20,2<br>**160** (265) | 27,7<br>**206** (355) | 33,7<br>**250** (400) | 36,1<br>**280** (462) | 40,7<br>**315** (530) | 51,6<br>**400** (690) | 58,1<br>**450** (800) | 94,3<br>**710** (1220) | 132<br>**1000** (1700) |
| | **80** | 1,12 | 12,6<br>**109** (175) | 14,1<br>**122** (200) | 16<br>**140** (243) | 18,3<br>**160** (280) | 24,3<br>**206** (355) | 29,5<br>**250** (400) | 33<br>**280** (487) | 37,1<br>**315** (560) | 45,1<br>**400** (690) | 49,9<br>**450** (800) | – | – |
| | **90** | 1 | 11,6<br>**109** (175) | 13<br>**122** (200) | 14,1<br>**140** (230) | 16,2<br>**160** (265) | 22,2<br>**206** (355) | 26,9<br>**250** (400) | 28,9<br>**280** (462) | 32,5<br>**315** (530) | 40,7<br>**400** (650) | 45,8<br>**450** (750) | – | – |
| | **100** | 0,9 | 10,1<br>**109** (175) | 11,3<br>**122** (200) | 12,8<br>**140** (243) | 14,7<br>**160** (280) | 19,4<br>**206** (355) | 23,6<br>**250** (400) | 26,4<br>**280** (487) | 29,7<br>**315** (560) | 37,1<br>**400** (690) | 41,9<br>**450** (775) | 65,6<br>**710** (1250) | 88<br>**1000** (1800) |
| | **125** | 0,71 | – | – | 10,3<br>**140** (212) | 11,7<br>**160** (243) | – | – | 21,1<br>**280** (425) | 23,7<br>**315** (487) | – | – | – | – |
| C3I | **125** | 0,71 | 7,89<br>**109** (175) | 8,84<br>**122** (200) | 10,2<br>**140** (243) | 11,6<br>**160** (280) | 14,9<br>**206** (355) | 18,1<br>**250** (400) | 20,3<br>**280** (487) | 22,8<br>**315** (560) | 28,6<br>**400** (690) | 30,1<br>**429** (800) | 51,4<br>**710** (1250) | 69,2<br>**1000** (1800) |
| | **160** | 0,56 | 6,26<br>**109** (175) | 7<br>**122** (200) | 8,05<br>**140** (243) | 9,2<br>**160** (280) | 11,8<br>**206** (355) | 14,4<br>**250** (400) | 16,1<br>**280** (487) | 18,1<br>**315** (560) | 22,9<br>**400** (690) | 25,3<br>**450** (800) | 41,1<br>**710** (1250) | 55,4<br>**1000** (1800) |
| | **200** | 0,45 | 4,92<br>**109** (175) | 5,51<br>**122** (200) | 6,34<br>**140** (243) | 7,24<br>**160** (280) | 9,62<br>**206** (355) | 11,7<br>**250** (400) | 13,1<br>**280** (487) | 14,7<br>**315** (560) | 18,1<br>**400** (690) | 20,2<br>**450** (800) | 32,6<br>**710** (1250) | 43,9<br>**1000** (1800) |
| | **250** | 0,36 | 3,88<br>**109** (175) | 4,35<br>**122** (200) | 5<br>**140** (243) | 5,71<br>**160** (280) | 7,58<br>**206** (355) | 9,2<br>**250** (400) | 10,3<br>**280** (487) | 11,6<br>**315** (560) | 14,5<br>**400** (690) | 16<br>**450** (800) | 25,7<br>**710** (1250) | 34,6<br>**1000** (1800) |
| | **315** | 0,28 | 3,16<br>**109** (175) | 3,53<br>**122** (200) | 4,06<br>**140** (243) | 4,64<br>**160** (280) | 5,97<br>**206** (355) | 7,25<br>**250** (400) | 8,12<br>**280** (487) | 9,14<br>**315** (560) | 11,4<br>**400** (690) | 12,6<br>**450** (800) | 20,3<br>**710** (1250) | 27,3<br>**1000** (1800) |



2586-01.02

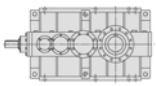

## Summary of transmission ratios *i*

| Train of gears | $i_N$ | Gear reducer size | | | | | | | | | | | |
|---|---|---|---|---|---|---|---|---|---|---|---|---|---|
| | | *i* | | | | | | | | | | | |
| | | **4000** | **4001** | **4500** | **4501** | **5000** | **5001** | **5600** | **5601** | **6300** | **6301** | **7101** | **8001** |
| **CI** | **8** | 7,76 | 7,76 | 8,12 | – | – | – | – | – | – | – | – | – |
| | **9** | 8,82 | 8,82 | 9,33 | 9,33 | – | – | – | – | – | – | – | – |
| | **10** | 10,2 | 10,2 | 10,1 | 10,3 | – | – | – | – | – | – | – | – |
| | **11,2** | 11,3 | 11,3 | 11,7 | 11,7 | – | – | – | – | – | – | – | – |
| | **12,5** | 12,8 | 12,8 | 12,9 | 12,9 | – | – | – | – | – | – | – | – |
| | **14** | 14,2 | 14,2 | 14,7 | 14,7 | – | – | – | – | – | – | – | – |
| | **16** | 16,3 | 16,3 | 16,2 | 16,2 | – | – | – | – | – | – | – | – |
| | **18** | 18* | 18* | 18,7 | – | – | – | – | – | – | – | – | – |
| **C2I** | **20** | 19,7 | 19,7 | 20,6 | 20,6 | – | – | – | – | – | – | – | – |
| | **22,4** | 22,4 | 22,4 | 22,7 | 22,7 | 22,2 | 22,2 | – | – | – | – | 23,3 | 24 |
| | **25** | 25,8 | 25,8 | 25,8 | 25,8 | 25,4 | 25,4 | 25,4 | 25,4 | – | – | 25,7 | 26,6 |
| | **28** | 28 | 28 | 29,6 | 29,6 | 27,8 | 27,8 | 29 | 29 | 28,6 | 28,7 | 29,7 | 30,6 |
| | **31,5** | 32,3 | 32,3 | 32,2 | 32,2 | 31,8 | 31,8 | 31,8 | 31,8 | 32,9 | 33,6 | 32,8 | 33,8 |
| | **35,5** | 35,3 | 35,3 | 37,1 | 37,1 | 35* | 35* | 36,2 | 36,2 | 36,5 | 36,5 | 37,1 | 37,2 |
| | **40** | 40,7 | 40,7 | 40,6 | 40,6 | 40* | 40* | 40* | 40* | 41,2 | 41,9 | 41 | 41,1 |
| | **45** | 44,5 | 44,5 | 46,7 | 46,7 | 44,2 | 44,2 | 45,6 | 45,6 | 45,3 | 45,7 | 44,5 | 45,9 |
| | **50** | 51,3 | 51,3 | 51,2 | 51,2 | 50,5 | 50,5 | 50,5 | 50,5 | 52,2 | 53,1 | 51,3 | 52,9 |
| | **56** | 56,5 | 56,5 | 58,9 | 58,9 | 56* | 56* | 57,6 | 57,6 | 57,2 | 57,9 | 56,8 | 58,5 |
| | **63** | 65,1 | 65,1 | 64,9 | 64,9 | 64* | 64* | 64* | 64* | 65,8 | 67 | 64,1 | 64,3 |
| | **71** | 70,6 | 70,6 | 74,7 | 74,7 | 70* | 70* | 73* | 73* | 73 | 73 | 71 | 71,1 |
| | **80** | 81,3 | 81,3 | 82,3 | 82,3 | 80* | 80* | 80* | 80* | 83,5 | 85 | – | – |
| | **90** | 88,2 | 88,2 | 93,3 | 93,3 | 87,5* | 87,5* | 91,3 | 91,3 | 92,6 | 92,6 | – | – |
| | **100** | 102 | 102 | 103 | 103 | 100* | 100* | 100* | 100* | 101 | 101 | 102 | 107 |
| | **125** | – | – | 129 | 129 | – | – | 125* | 125* | – | – | – | – |
| **C3I** | **125** | 130 | 130 | 130 | 130 | 130* | 130* | 130* | 130* | 132 | 134 | 130 | 136 |
| | **160** | 164 | 164 | 164 | 164 | 164* | 164* | 164* | 164* | 165 | 168 | 163 | 170 |
| | **200** | 209 | 209 | 208 | 208 | 202 | 202 | 202 | 202 | 208 | 210 | 205 | 215 |
| | **250** | 265 | 265 | 264 | 264 | 256* | 256* | 256* | 256* | 260 | 265 | 260 | 272 |
| | **315** | 325 | 325 | 325 | 325 | 325 | 325 | 325 | 325 | 329 | 336 | 330 | 345 |

9

* **Finite** transmission ratio.

# 10 - Dimensions, designs, mounting positions
(bevel helical gear reducers)

**10.1 - Gear reducers R CI** ..... **72**
Dimensions ..... 72
Designs (direction of rotation) ..... 73
Mounting positions ..... 74
Lubrication - Plug position and oil quantity ..... 75

**10.2 - Gear reducers R C2I** ..... **76**
Dimensions ..... 76
Designs (direction of rotation) ..... 77
Mounting positions ..... 78
Lubrication - Plug position and oil quantity ..... 79

**10.3 - Gear reducers R C3I** ..... **80**
Dimensions ..... 80
Designs (direction of rotation) ..... 81
Mounting positions ..... 82
Lubrication - Plug position and oil quantity ..... 83



2586-01.02

# 10.1 - Gear reducers R CI

## Dimensions

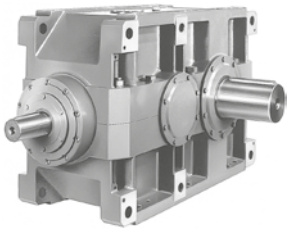

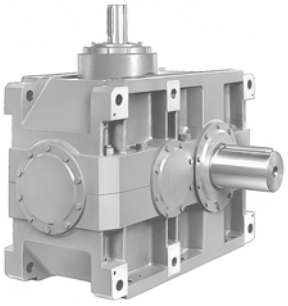

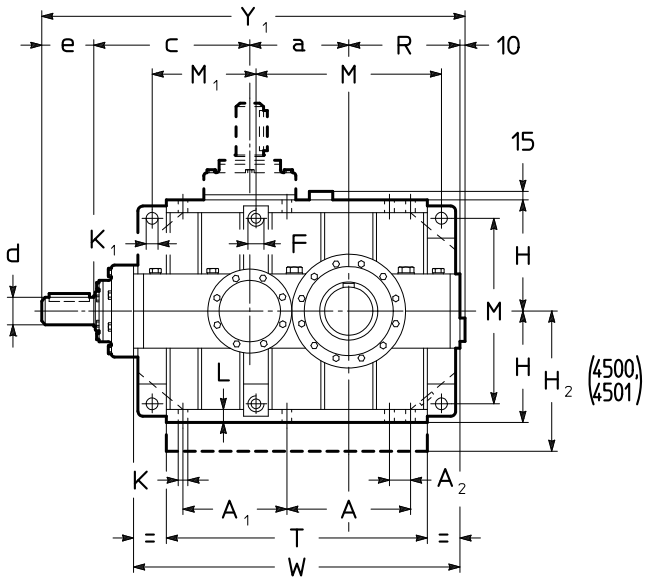


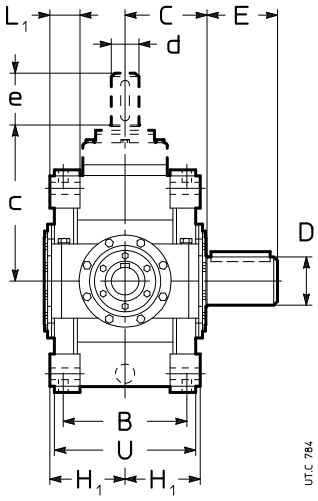


| Size | a | A | $A_1$ / $M_1$ | $A_2$ | B | C 3) | c | F 1) | H h11 / R | $H_1$ h12 | $H_2$ h11 | K Ø | $K_1$ Ø H11 | L | $L_1$ | M | T | U | W | kg | kg 4) |
|---|---|---|---|---|---|---|---|---|---|---|---|---|---|---|---|---|---|---|---|---|---|
| **4000** | 400 | 505 | 420 | 90 | 500 | 330 | 605 | M45 | 450 | 296 | – | 39 | 48 | 52 | 116 | 750 | 1055 | 580 | 1320 | 2240 | 2310 |
| **4001** | | | | | | | | | | | | | | | | | | | | 2310 | 2390 |
| **4500** | 450 | 505 | 470 | 90 | 500 | 358 | 605 | M45 | 450 | 296 | 560 | 39 | 48 | 52 | 116 | 750 | 1105 | 580 | 1370 | 2750 | 2840 |
| **4501** | | | | | | | | | | | | | | | | | | | | 2830 | 2940 |

| Size | D Ø | E | d Ø | e | $Y_1$ 2) | d Ø | e | $Y_1$ 2) |
|---|---|---|---|---|---|---|---|---|
| | | | $i_N \leq 11{,}2$ | | | $i_N \geq 12{,}5$ | | |
| **4000** | 190 | 280 | 110 | 210 | 1675 | 90 | 170 | 1635 |
| **4001** | 200 | | | | | | | |
| | | | $i_N \leq 12{,}5$ | | | $i_N \geq 14$ | | |
| **4500** | 210 | 300 | 110 | 210 | 1725 | 90 | 170 | 1685 |
| **4501** | 220 | | | | | | | |

1) Working length of thread 1,7 · F.
2) For mounting positions B6, B7, V5, V6, dimension $Y_1$ increases by approx. 20 for filler plug overall dimensions.
3) The cover on bevel wheel side overhangs from **C** dimension (see ch. 6) by 33 mm for sizes 4000, 4001 and 5 mm for sizes 5000, 5001.
4) Values valid for double extension low speed shaft.

## 10.1 - Gear reducers R CI

### **Designs**[1) 2)] (direction of rotation)

Solid low speed shaft (standard)

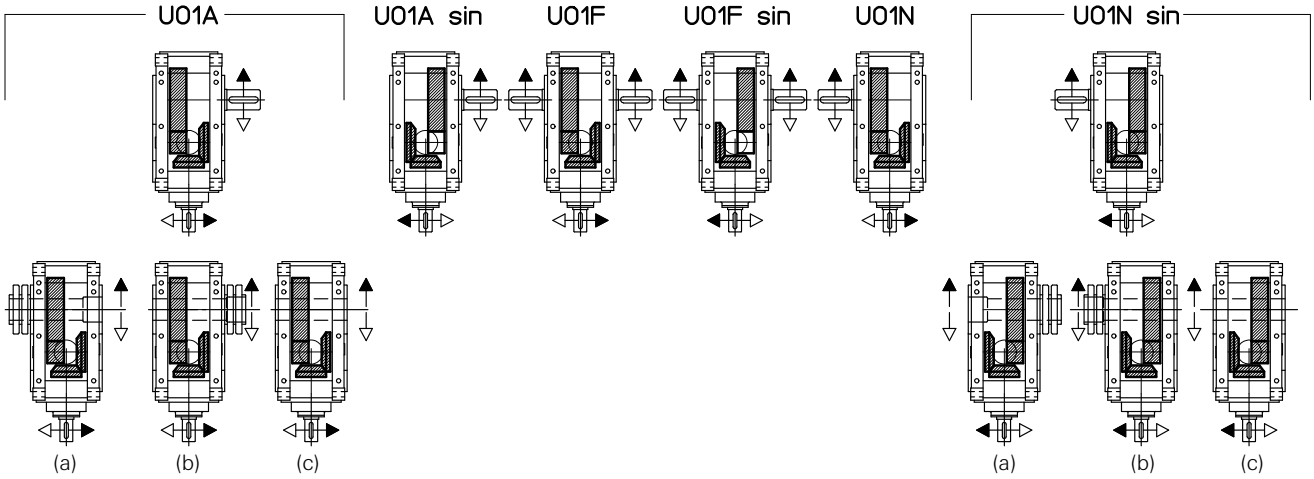


Solid low speed shaft (standard)

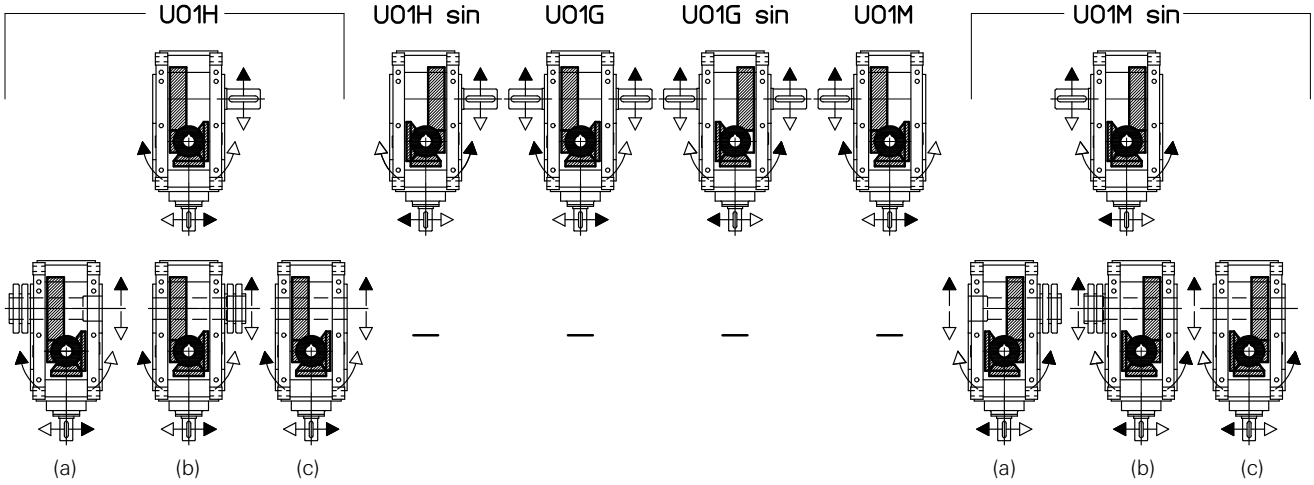


Solid low speed shaft (standard)

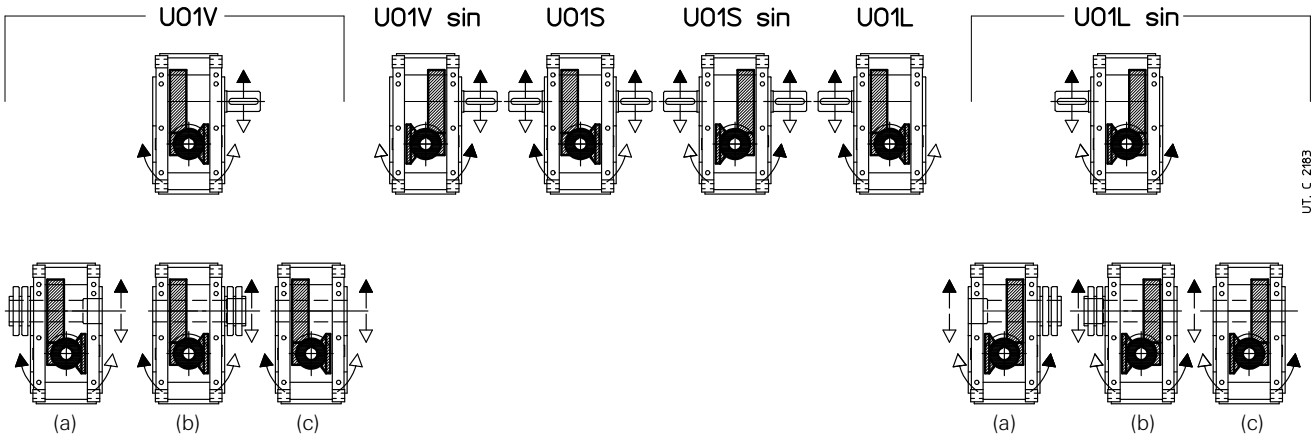


(a) Hollow low speed shaft **with shrink disc on machine opposite side** (on request, see ch. 12).
(b) Hollow low speed shaft **with shrink disc on machine side** (on request, see ch. 12).
(c) Hollow low speed shaft **with keyway** (on request, see ch. 12).
1) The housing of designs UO1A ... UO1N sin is not prearranged for other designs (UO1H ... UO1L sin).
2) For UO1A, UO1H, UO1V designs and derivatives it is recommended to adopt the black arrow direction of rotation; for UO1A sin, UO1H sin, UO1V sin designs and derivatives, the white arrow direction of rotation. If it is not possible, consult us.

## 10.1 - Gear reducers R CI

### Mounting positions

Except specific needs, prefer mounting position B3 (see ch. 2).

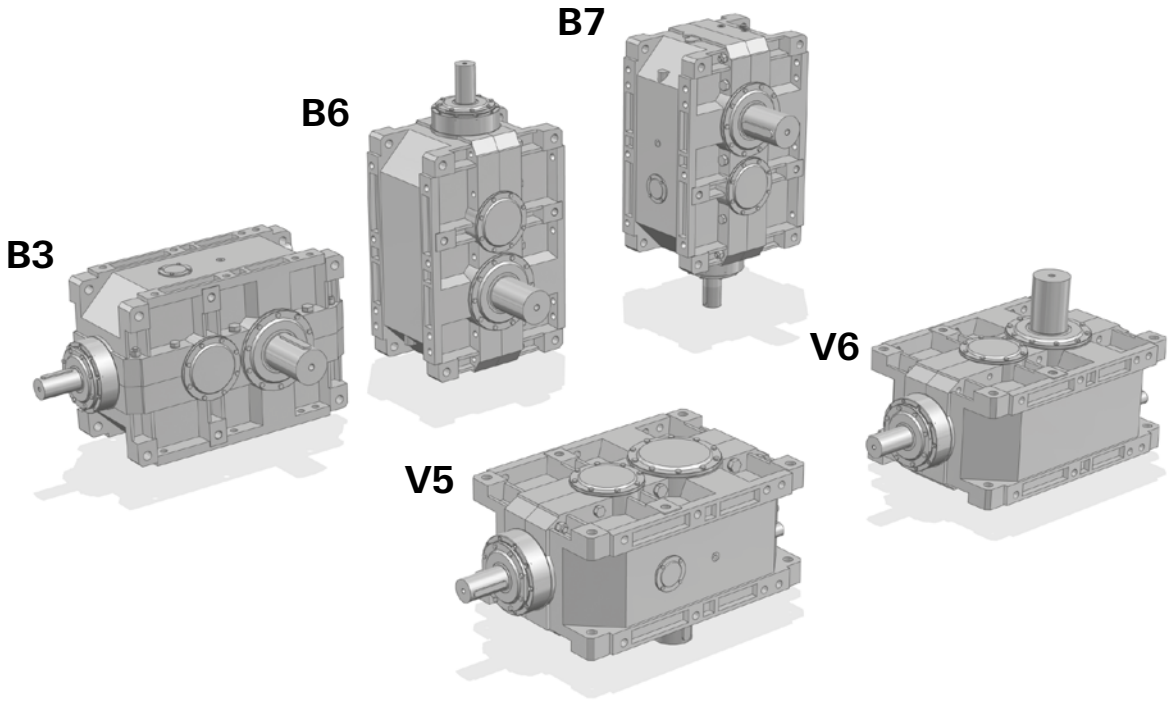


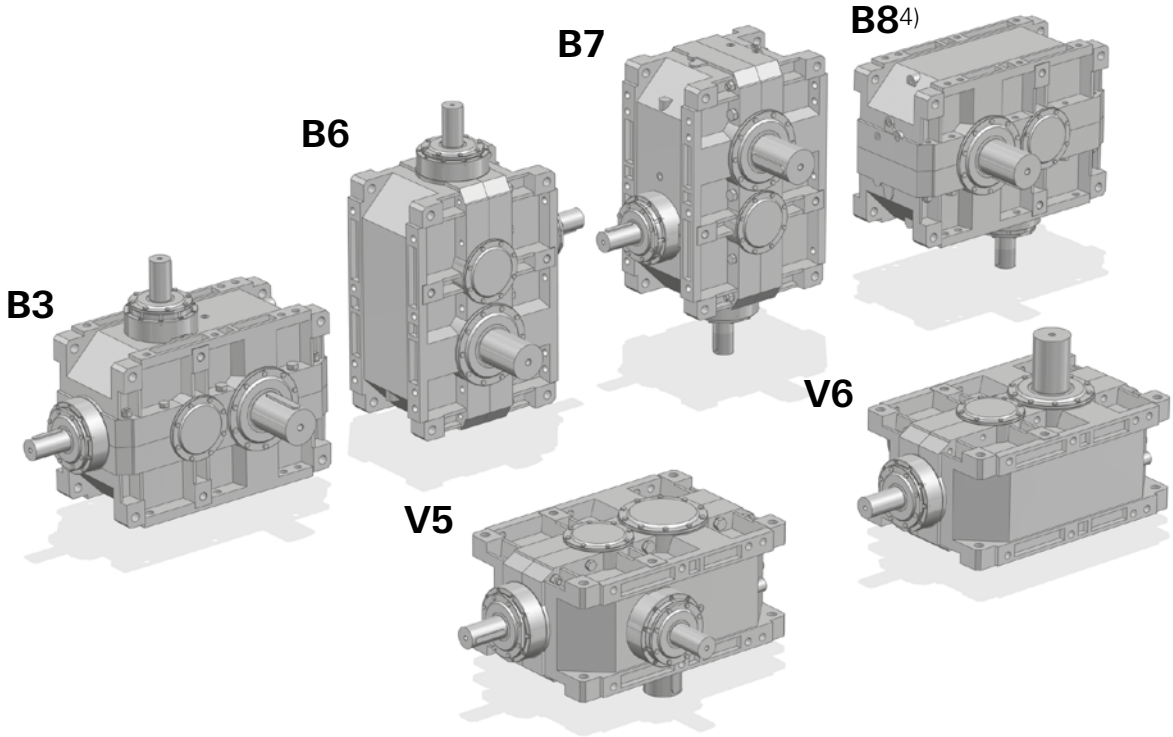


10

Possible high oil splash: for the corrective factor $f_{t3}$ of nominal thermal power $P_{tN}$ see ch. 4.

Possible bearing lubrication pump: consult us for verification.

1) Mounting position **B3** may be identified from the position of the screw-heads as arrowed. The same is valid for mounting positions V5 and V6 with double extension or hollow low speed shaft: in these cases, consider the **position of low speed wheel**, for the identification of correct mounting position (see also «Designs» at the previous page).

2) for designs UO1H ... UO1M sin, UO1V ... UO1L sin.

3) for designs UO1A ... UO1N sin, UO1H ... UO1M sin.

4) Mounting position B8 available only for designs UO1V ... UO1L sin.

* Valid in case of **hollow low speed shaft** (with shrink disc or keyway).

▼ Oil filler plug
● Oil level plug
■ Oil drain plug

▽ Oil filler plug on opposite side (not in view)
▨ Oil level plug on opposite side (not in view)
⊘ Oil drain plug on opposite side (not in view)

2586-01.02

## 10.1 - Gear reducers R CI

### Lubrication - Plug position and oil quantity

Oil quantity are approximate for provisioning and can vary according to the design and specific application. The exact quantity the gear reducer is to be filled with is definitely given by the level.

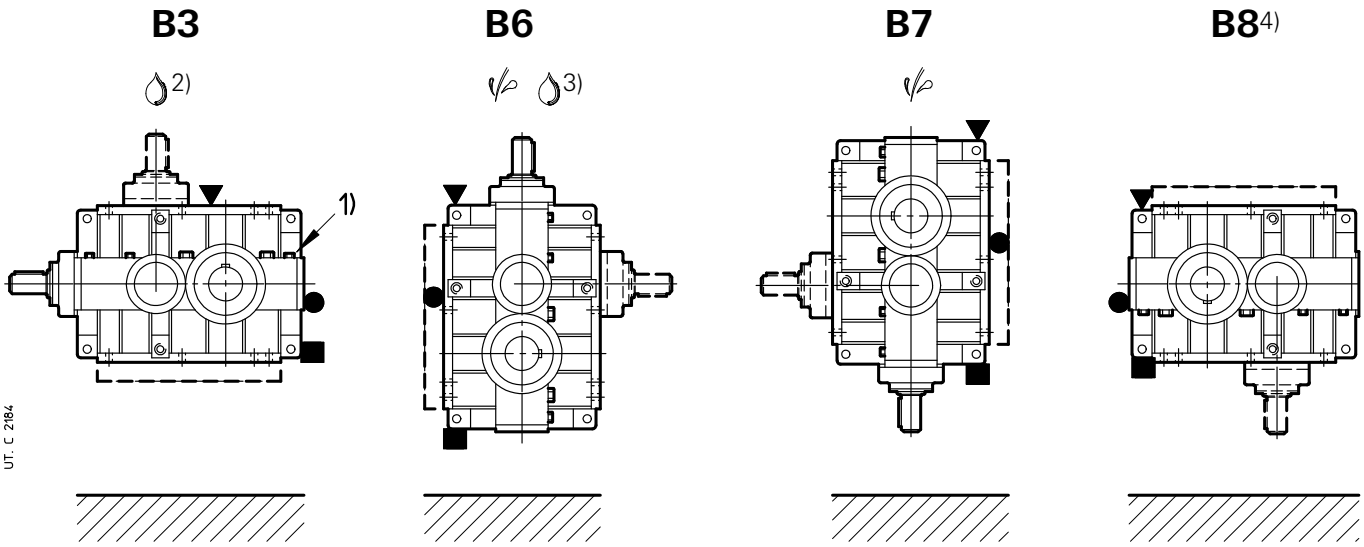


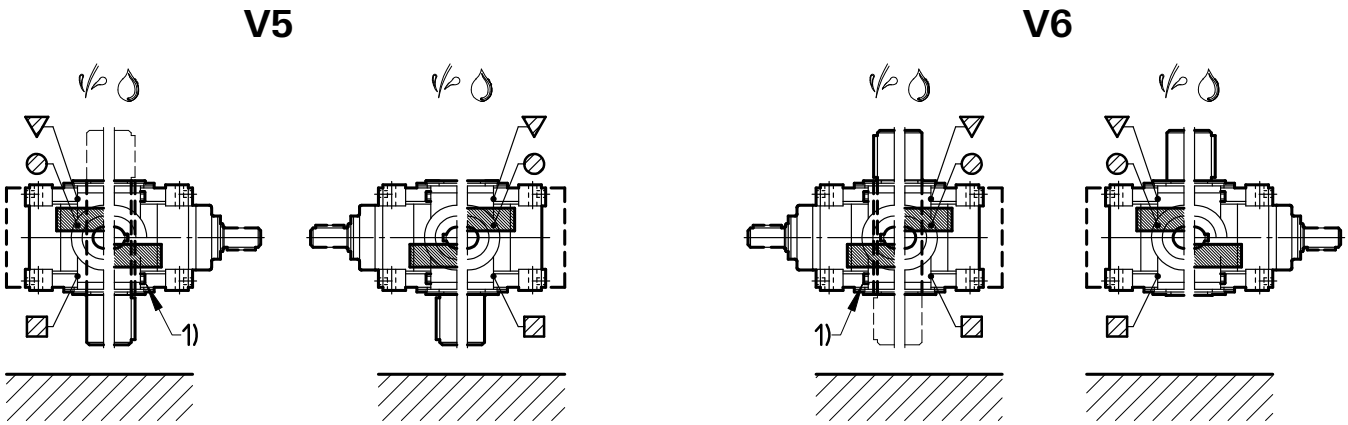


| | | | |
|---|---|---|---|
| UO1A<br>UO1F | UO1A sin<br>UO1F sin | UO1N | UO1N sin |
| UO1H<br>UO1G | UO1H sin<br>UO1G sin | UO1M | UO1M sin |
| UO1V<br>UO1S | UO1V sin<br>UO1S sin | UO1L | UO1L sin |
| UO1A*<br>UO1H*<br>UO1V | UO1N sin*<br>UO1M sin*<br>UO1L sin* | | |

| | | | |
|---|---|---|---|
| UO1A<br>UO1F | UO1A sin<br>UO1F sin | UO1N | UO1N sin |
| UO1H<br>UO1G | UO1H sin<br>UO1G sin | UO1M | UO1M sin |
| UO1V<br>UO1S | UO1V sin<br>UO1S sin | UO1L | UO1L sin |
| UO1A*<br>UO1H*<br>UO1V | UO1N sin*<br>UO1M sin*<br>UO1L sin* | | |

10

| Size | Oil quantity [l] | | | | | |
|---|---|---|---|---|---|---|
| | B3 | B6 | B7 | B8 4) | V5, V6 | |
| | | | | | with low speed shaft on bottom | with low speed wheel on top |
| **4000, 4001**<br>**4500, 4501** | 100<br>132 | 150<br>190 | 160<br>212 | 100<br>132 | 112<br>140 | 118<br>170 |

2586-01.02

## 10.2 - Gear reducers R C2I

### Dimensions

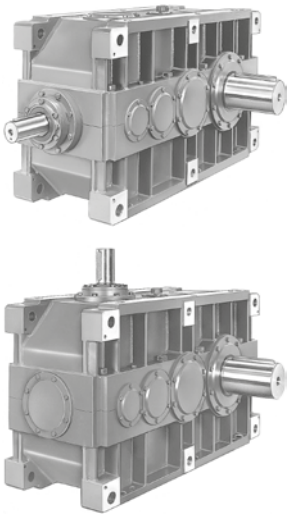

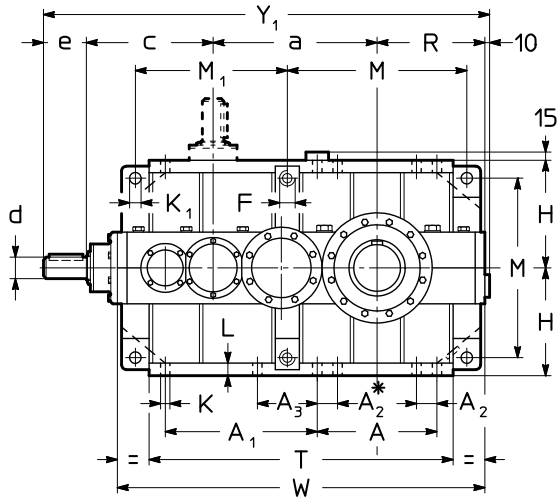


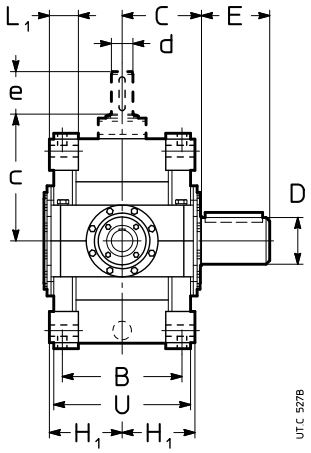


* For sizes ⩾ 6300, only.

| Size | a | A | $A_1$ $M_1$ | $A_2$ | $A_3$ | B | C | c | F 1) | H h11 R | $H_1$ h12 | K Ø | $K_1$ Ø H11 | L | $L_1$ | M | T | U | W | kg | kg 3) |
|---|---|---|---|---|---|---|---|---|---|---|---|---|---|---|---|---|---|---|---|---|---|
| **4000**<br>**4001** | 700 | 505 | 625 | 90 | – | 500 | 330 | 480 | M45 | 450 | 296 | 39 | 48 | 52 | 116 | 750 | 1260 | 580 | 1525 | 2440<br>2520 | 2510<br>2600 |
| **4500**<br>**4501** | 750 | 505 | 675 | 90 | – | 500 | 358 | 480 | M45 | 450 | 296 | 39 | 48 | 52 | 116 | 750 | 1310 | 580 | 1575 | 2780<br>2850 | 2870<br>2960 |
| **5000**<br>**5001** | 875 | 630 | 785 | 115 | – | 625 | 410[4] | 605 | M56 | 560 | 370 | 48 | 60 | 65 | 148 | 930 | 1575 | 725 | 1905 | 4790<br>4910 | 4930<br>5070 |
| **5600**<br>**5601** | 935 | 630 | 845 | 115 | – | 625 | 445 | 605 | M56 | 560 | 370 | 48 | 60 | 65 | 148 | 930 | 1635 | 725 | 1965 | 5680<br>5800 | 5880<br>6020 |
| **6300**<br>**6301** | 1080 | 770 | 970 | 115 | – | 695 | 490 | 605[5] | M56 | 630 | 406 | 48 | 60 | 65 | 148 | 1070 | 1900 | 795 | 2230 | 7950<br>8060 | 8230<br>8390 |
| **7101** | 1270 | 930 | 1228 | 115 | 590 | 843 | 601 | 833 | M56 | 710 | 481 | 48 | 66 | 71 | 185 | 1230 | 2279 | 943 | 2648 | 13350 | 13850 |
| **8001** | 1430 | 1008 | 1286 | 145 | 596 | 944 | 682 | 934 | M90 | 900 | 544 | 60 | 95 | 85 | 250 | 1574 | 2590 | 1064 | 3086 | 20550 | 21270 |

| Size | D Ø | E | d Ø | e | $Y_1$ 2) | d Ø | e | $Y_1$ 2) |
|---|---|---|---|---|---|---|---|---|
| | | | | $i_N \leqslant 40$ | | | $i_N \geqslant 45$ | |
| **4000**<br>**4001** | 190<br>200 | 280 | 90 | 170 | 1810 | 70 | 140 | 1780 |
| | | | | $i_N \leqslant 45$ | | | $i_N \geqslant 50$ | |
| **4500**<br>**4501** | 210<br>220 | 300 | 90 | 170 | 1860 | 70 | 140 | 1830 |
| | | | | $i_N \leqslant 40$ | | | $i_N \geqslant 45$ | |
| **5000**<br>**5001** | 240<br>250 | 330 | 110 | 210 | 2260 | 90 | 170 | 2220 |
| | | | | $i_N \leqslant 45$ | | | $i_N \geqslant 50$ | |
| **5600**<br>**5601** | 270<br>280 | 380 | 110 | 210 | 2320 | 90 | 170 | 2280 |
| | | | | $i_N \leqslant 50$[6] | | | $i_N \geqslant 56$[6] | |
| **6300**<br>**6301** | 300<br>320 | 430 | 110 | 210 | 2535 | 90 | 170 | 2495 |
| | | | | $i_N \leqslant 31,5$ | | | $i_N \geqslant 35,5$ | |
| **7101** | 360 | 590 | 140 | 250 | 3073 | 110 | 210 | 3033 |
| **8001** | 400 | 660 | 150 | 245 | 3519 | 125 | 210 | 3474 |

1) Working length of thread 1,7 · F.
2) For mounting positions B6, B7, V5, V6 dimension Y1 increases by 20 for overall dimensions of filler plug.
3) Values valid for double extension low speed shaft.
4) The cover on bevel wheel side overhangs from **C** dimension (see ch. 6) by 13 mm.
5) The high speed shaft end shoulder is within dimension H.
6) For size 6301: $i_N \leqslant 56$ and $i_N \geqslant 63$, respectively.

## 10.2 - Gear reducers R C2I

### **Designs**[1) 2)] (direction of rotation)

Solid low speed shaft (standard)

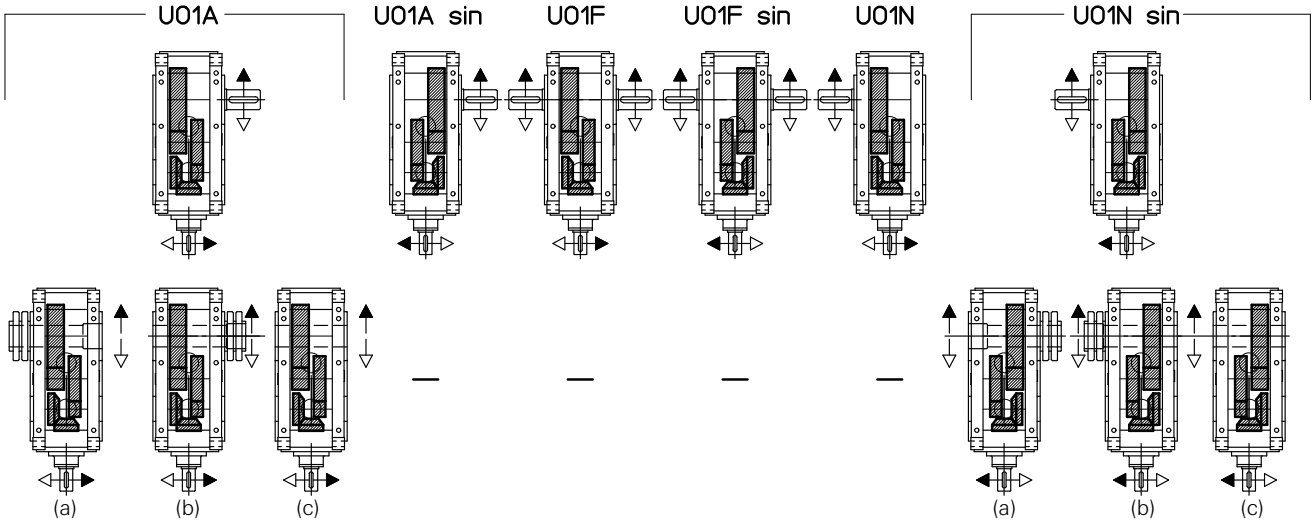


Solid low speed shaft (standard)

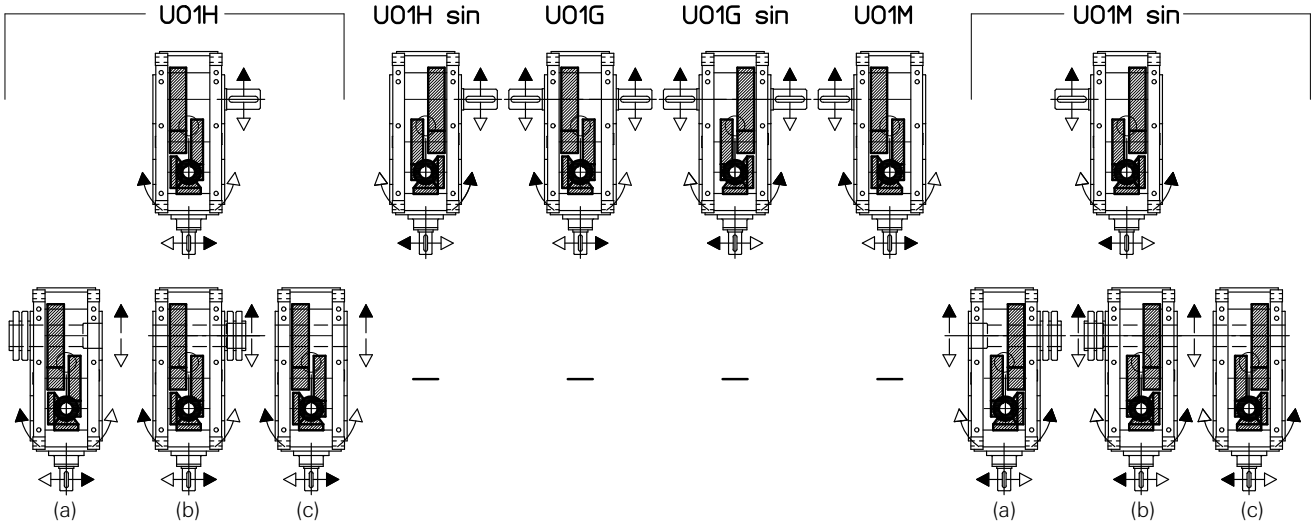


Solid low speed shaft (standard)

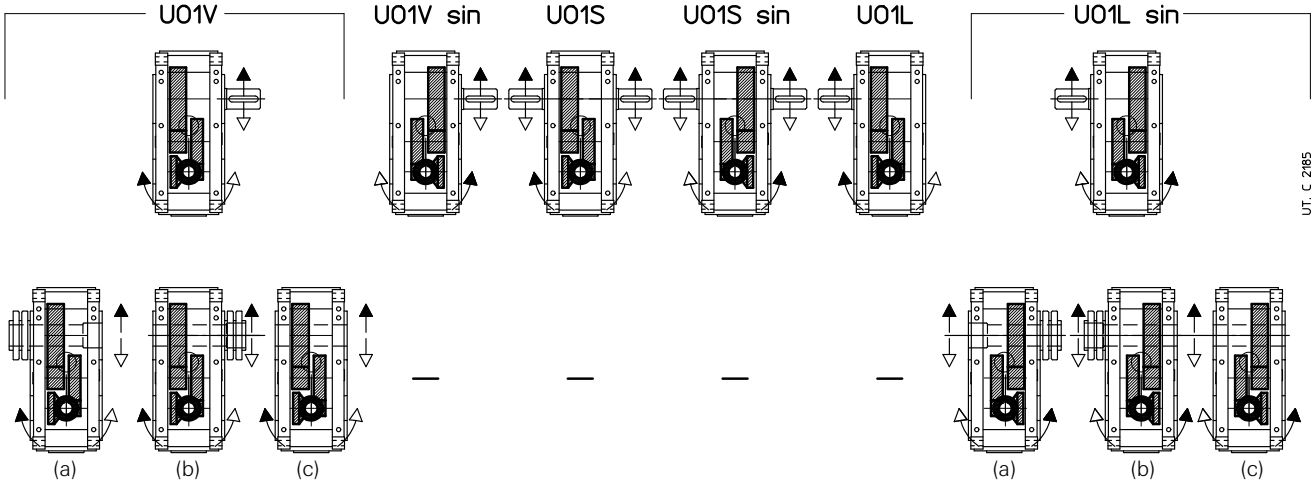


(a) Hollow low speed shaft **with shrink disc on machine opposite side** (on request, see ch. 12).
(b) Hollow low speed shaft **with shrink disc on machine side** (on request, see ch. 12).
(c) Hollow low speed shaft **with keyway** (on request, see ch. 12).
1) The housing of designs UO1A ... UO1N sin is not prearranged for other designs (UO1H ... UO1L sin).
2) For UO1A, UO1H, UO1V designs and derivatives it is recommended to adopt the black arrow direction of rotation; for UO1A sin, UO1H sin, UO1V sin designs and derivatives, the white arrow direction of rotation. If it is not possible, consult us.



2586-01.02

## 10.2 - Gear reducers R C2I

### Mounting positions

Except specific needs, prefer mounting position B3 (see ch. 2).

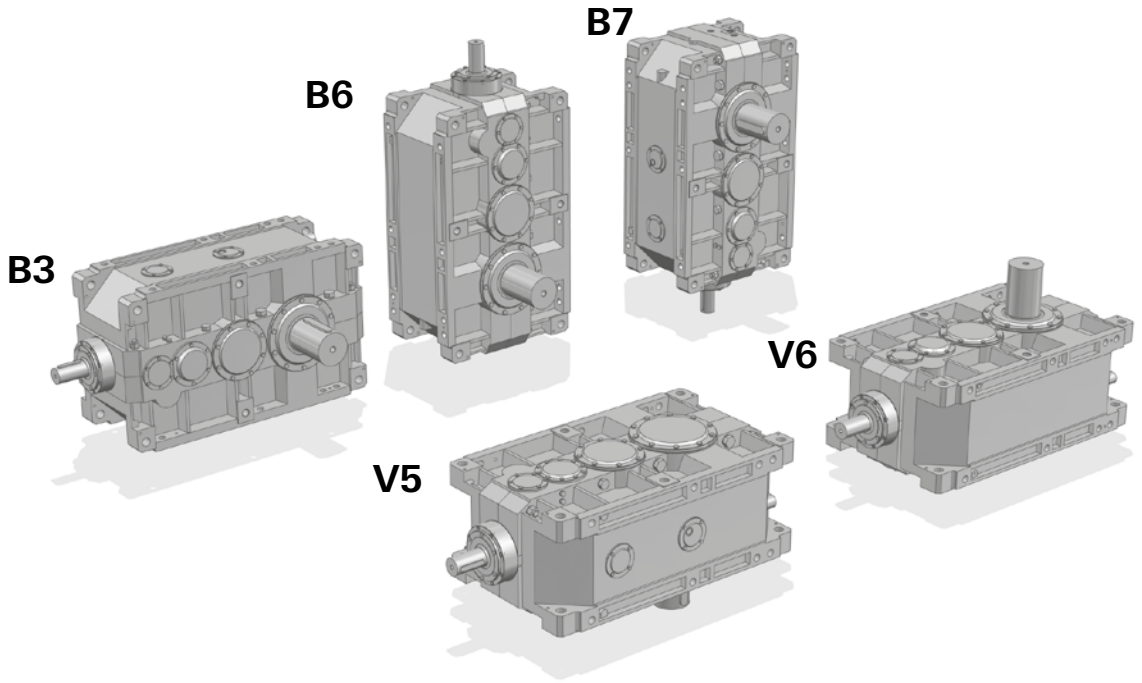


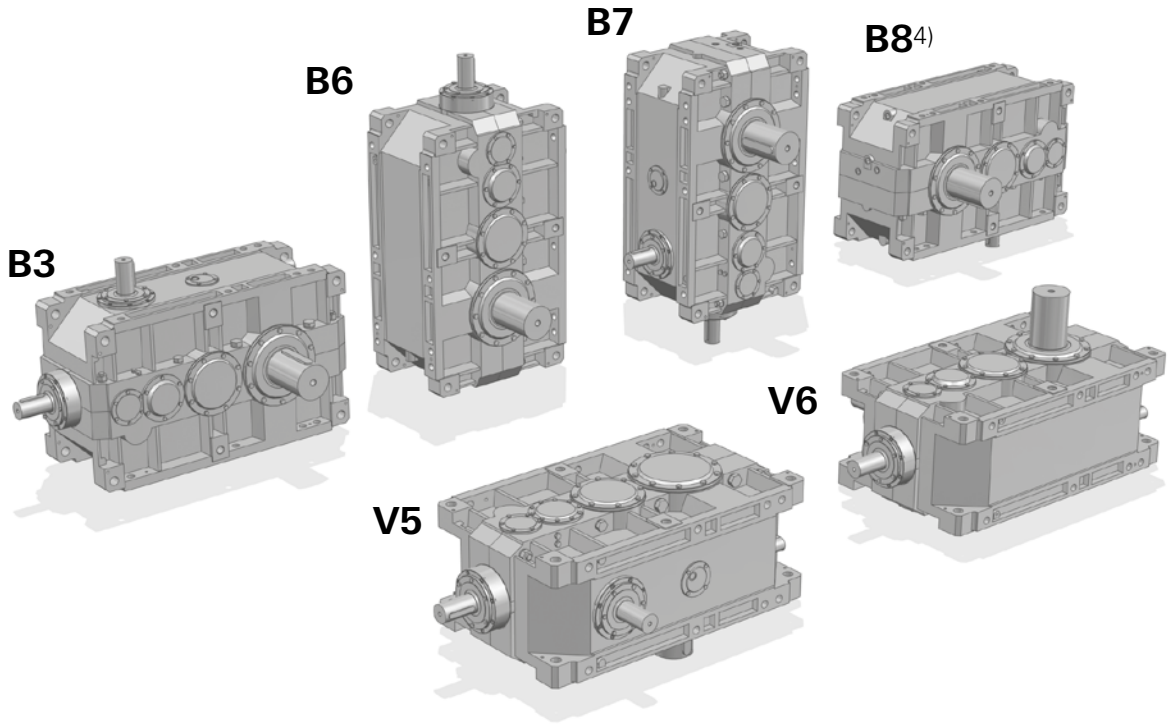


10

Possible high oil splash: for the corrective factor $ft_3$ of nominal thermal power $Pt_N$ see ch. 4.

Possible bearing lubrication pump: consult us for verification.

1) Mounting position **B3** may be identified from the position of the screw-heads as arrowed. The same is valid for mounting positions V5 and V6 with double extension or hollow low speed shaft: in these cases, consider the **position of low speed wheel**, for the identification of correct mounting position (see also «Designs» at the previous page).

2) for designs UO1H ... UO1M sin, UO1V ... UO1L sin.

3) for designs UO1A ... UO1N sin, UO1H ... UO1M sin.

4) Mounting position B8 available only for designs UO1V ... UO1L sin.

* Valid in case of **hollow low speed shaft** (with shrink disc or keyway).

▼ Oil filler plug
● Oil level plug
■ Oil drain plug

▽ Oil filler plug on opposite side (not in view)
▨ Oil level plug on opposite side (not in view)
⊘ Oil drain plug on opposite side (not in view)

2586-01.02

## 10.2 - Gear reducers R C2I

### Lubrication - Plug position and oil quantity

Oil quantity are approximate for provisioning and can vary according to the design and specific application. The exact quantity the gear reducer is to be filled with is definitely given by the level.

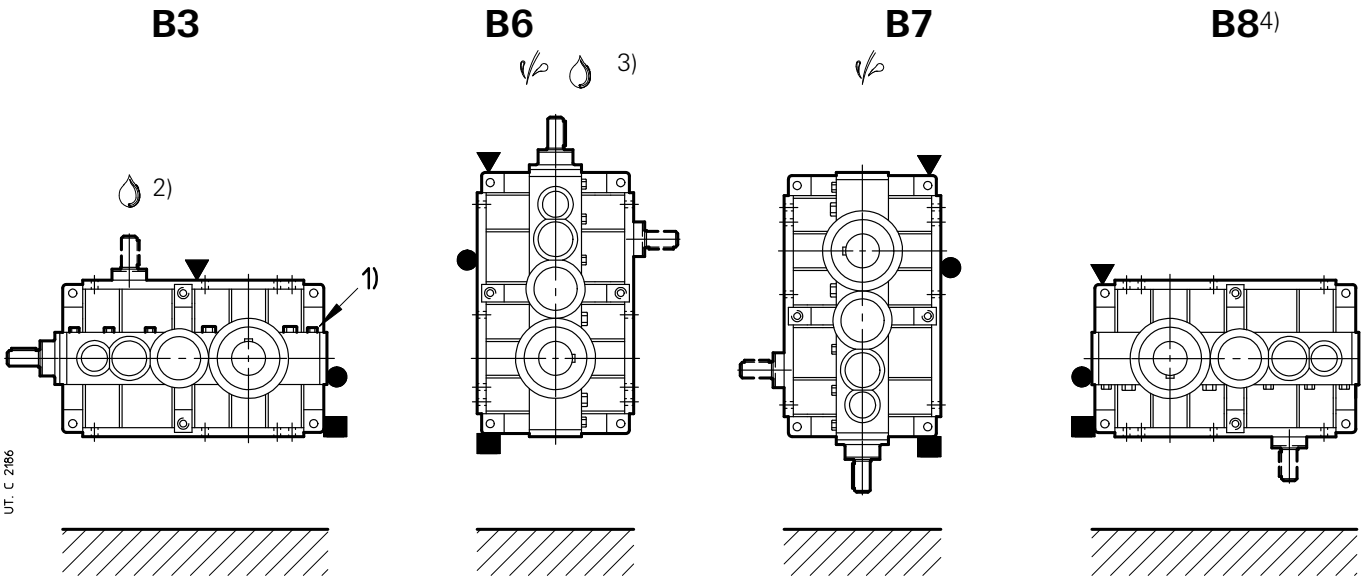


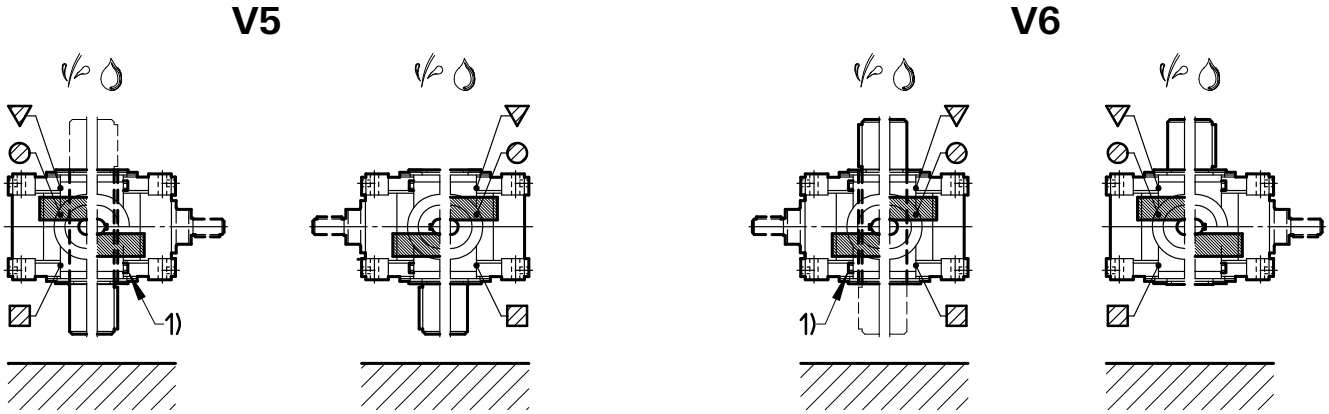


| | | | |
|---|---|---|---|
| UO1A<br>UO1F | UO1A sin<br>UO1F sin | UO1N | UO1N sin |
| UO1H<br>UO1G | UO1H sin<br>UO1G sin | UO1M | UO1M sin |
| UO1V<br>UO1S | UO1V sin<br>UO1S sin | UO1L | UO1L sin |
| UO1A*<br>UO1H*<br>UO1V | UO1N sin*<br>UO1M sin*<br>UO1L sin* | | |

| | | | |
|---|---|---|---|
| UO1A<br>UO1F | UO1A sin<br>UO1F sin | UO1N | UO1N sin |
| UO1H<br>UO1G | UO1H sin<br>UO1G sin | UO1M | UO1M sin |
| UO1V<br>UO1S | UO1V sin<br>UO1S sin | UO1L | UO1L sin |
| UO1A*<br>UO1H*<br>UO1V | UO1N sin*<br>UO1M sin*<br>UO1L sin* | | |

| Size | Oil quantity [l] | | | | | |
|---|---|---|---|---|---|---|
| | B3 | B6 | B7 | B8 4) | V5, V6 | |
| | | | | | with low speed shaft on bottom | with low speed wheel on top |
| **4000, 4001** | 132 | 224 | 224 | 132 | 224 | 250 |
| **4500, 4501** | 132 | 224 | 224 | 132 | 224 | 250 |
| **5000, 5001** | 265 | 450 | 425 | 265 | 450 | 475 |
| **5600, 5601** | 265 | 450 | 425 | 265 | 450 | 475 |
| **6300, 6301** | 375 | 630 | 630 | 375 | 630 | 710 |
| **7001** | 600 | 950 | 1060 | 600 | 950 | 1060 |
| **8001** | 1000 | 1700 | 1700 | 1000 | 1700 | 1800 |

Notes at previous page.

## 10.3 - Gear reducers R C3I

### Dimensions

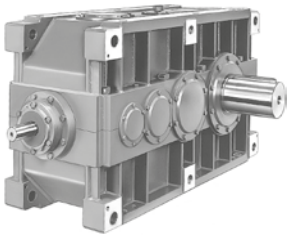

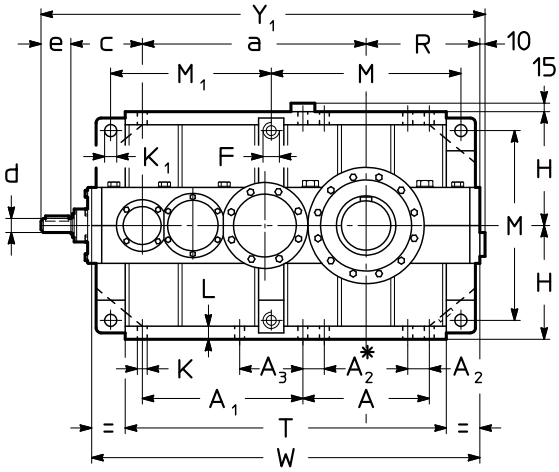


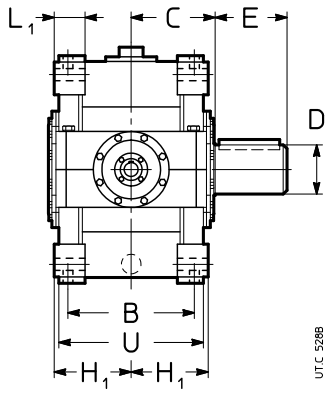


* For sizes ⩾ 6300, only.

| Size | a | A | $A_1$ / $M_1$ | $A_2$ | $A_3$ | B | C | F 1) | H h11 / R | $H_1$ h12 | K Ø | $K_1$ Ø H11 | L | $L_1$ | M | T | U | W | kg | kg 3) |
|---|---|---|---|---|---|---|---|---|---|---|---|---|---|---|---|---|---|---|---|---|
| **4000**<br>**4001** | 900 | 505 | 625 | 90 | – | 500 | 330 | M45 | 450 | 296 | 39 | 48 | 52 | 116 | 750 | 1260 | 580 | 1525 | 2440<br>2520 | 2510<br>2600 |
| **4500**<br>**4501** | 950 | 505 | 675 | 90 | – | 500 | 358 | M45 | 450 | 296 | 39 | 48 | 52 | 116 | 750 | 1310 | 580 | 1575 | 2780<br>2850 | 2870<br>2960 |
| **5000**<br>**5001** | 1125 | 630 | 785 | 115 | – | 625 | 410 | M56 | 560 | 370 | 48 | 60 | 65 | 148 | 930 | 1575 | 725 | 1905 | 4790<br>4910 | 4930<br>5070 |
| **5600**<br>**5601** | 1185 | 630 | 845 | 115 | – | 625 | 445 | M56 | 560 | 370 | 48 | 60 | 65 | 148 | 930 | 1635 | 725 | 1965 | 5680<br>5800 | 5880<br>6020 |
| **6300**<br>**6301** | 1380 | 770 | 970 | 115 | – | 695 | 490 | M56 | 630 | 406 | 48 | 60 | 65 | 148 | 1070 | 1900 | 795 | 2230 | 7950<br>8060 | 8230<br>8390 |
| **7101** | 1630 | 930 | 1228 | 115 | 590 | 843 | 601 | M56 | 710 | 481 | 48 | 66 | 71 | 185 | 1230 | 2279 | 943 | 2648 | 13260 | 13760 |
| **8001** | 1880 | 1008 | 1286 | 145 | 596 | 944 | 682 | M90 | 900 | 544 | 60 | 95 | 85 | 250 | 1574 | 2590 | 1064 | 3086 | 20450 | 21170 |

| Size | D Ø | E | c | d Ø | e | $Y_1$ 2) | c | d Ø | e | $Y_1$ 2) | c | d Ø | e | $Y_1$ 2) |
|---|---|---|---|---|---|---|---|---|---|---|---|---|---|---|
| | | | $i_N \leqslant 125$ | | | | $i_N = 160, 200$ | | | | $i_N \geqslant 250$ | | | |
| **4000**<br>**4001** | 190<br>200 | 280 | 282 | 48 | 110 | 1752 | 282 | 48 | 110 | 1752 | 282 | 38 | 80 | 1722 |
| | | | $i_N \leqslant 125$ | | | | $i_N = 160, 200$ | | | | $i_N \geqslant 250$ | | | |
| **4500**<br>**4501** | 210<br>220 | 300 | 282 | 48 | 110 | 1802 | 282 | 48 | 110 | 1802 | 282 | 38 | 80 | 1772 |
| | | | $i_N \leqslant 125$ | | | | $i_N = 160, 200$ | | | | $i_N \geqslant 250$ | | | |
| **5000**<br>**5001** | 240<br>250 | 330 | 380 | 70 | 140 | 2215 | 357 | 55 | 110 | 2162 | 357 | 48 | 110 | 2162 |
| | | | $i_N \leqslant 125$ | | | | $i_N = 160, 200$ | | | | $i_N \geqslant 250$ | | | |
| **5600**<br>**5601** | 270<br>280 | 380 | 380 | 70 | 140 | 2275 | 357 | 55 | 110 | 2222 | 357 | 48 | 110 | 2222 |
| | | | $i_N \leqslant 160$ 4) | | | | $i_N = 200, 250$ 4) | | | | $i_N = 315$ | | | |
| **6300**<br>**6301** | 300<br>320 | 430 | 380 | 70 | 140 | 2540 | 357 | 55 | 110 | 2487 | 357 | 48 | 110 | 2487 |
| | | | $i_N \leqslant 160$ | | | | $i_N = 200, 250$ | | | | $i_N = 315$ | | | |
| **7101** | 360 | 590 | 480 | 90 | 170 | 3000 | 480 | 70 | 140 | 2970 | 480 | 70 | 140 | 2970 |
| | | | $i_N \leqslant 160$ | | | | $i_N = 200, 250$ | | | | $i_N = 315$ | | | |
| **8001** | 400 | 660 | 605 | 110 | 210 | 3605 | 605 | 90 | 170 | 3565 | 605 | 90 | 170 | 3565 |

1) Working length of thread 1,7 · F.
2) For mounting positions B6, B7, V5, V6 dimension $Y_1$ increases by approx. 20 for overall dimensions of filler plug.
3) Values valid for double extension low speed shaft end.
4) For size 6301: $i_N \leqslant 200$ and $i_N = 250$, respectively.

## 10.3 - Gear reducers R C3I

### **Designs**[1) 2)] (direction of rotation)

Solid low speed shaft (standard)

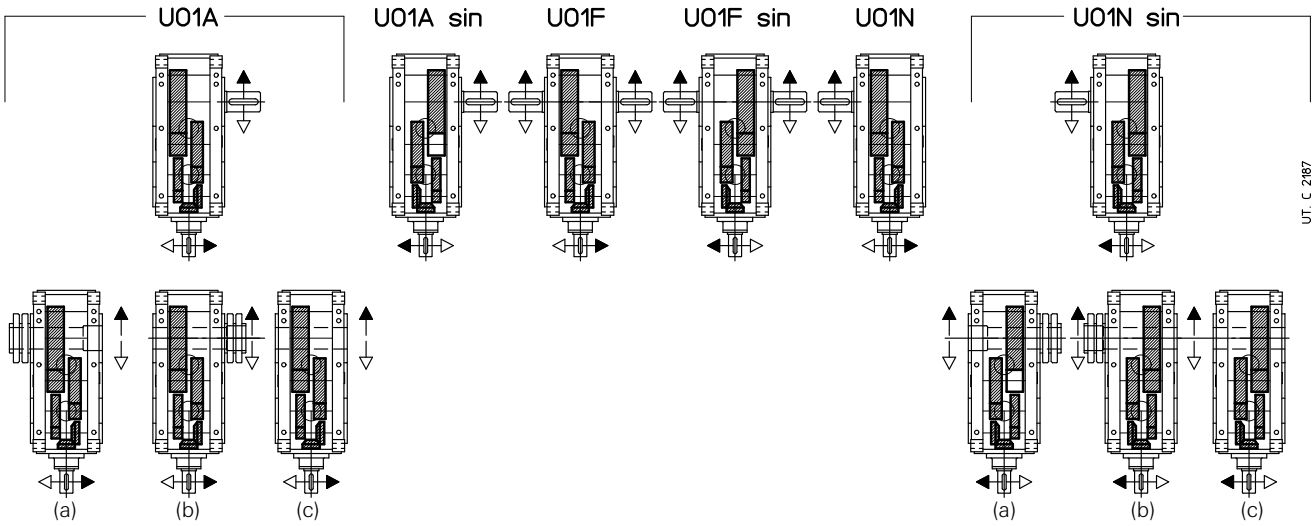


(a) Hollow low speed shaft **with shrink disc on machine opposite side** (on request, see ch. 12).
(b) Hollow low speed shaft **with shrink disc on machine side** (on request, see ch. 12).
(c) Hollow low speed shaft **with keyway** (on request, see ch. 12).
1) The housing of designs UO1A ... UO1N sin is not prearranged for other designs (UO1H ... UO1L sin).
2) For UO1A, UO1H, UO1V designs and derivatives it is recommended to adopt the black arrow direction of rotation; for UO1A sin, UO1H sin, UO1V sin designs and derivatives, the white arrow direction of rotation. If it is not possible, consult us.

## 10.3 - Gear reducers R C3I

### Mounting positions

Except specific needs, prefer mounting position B3 (see ch. 2).

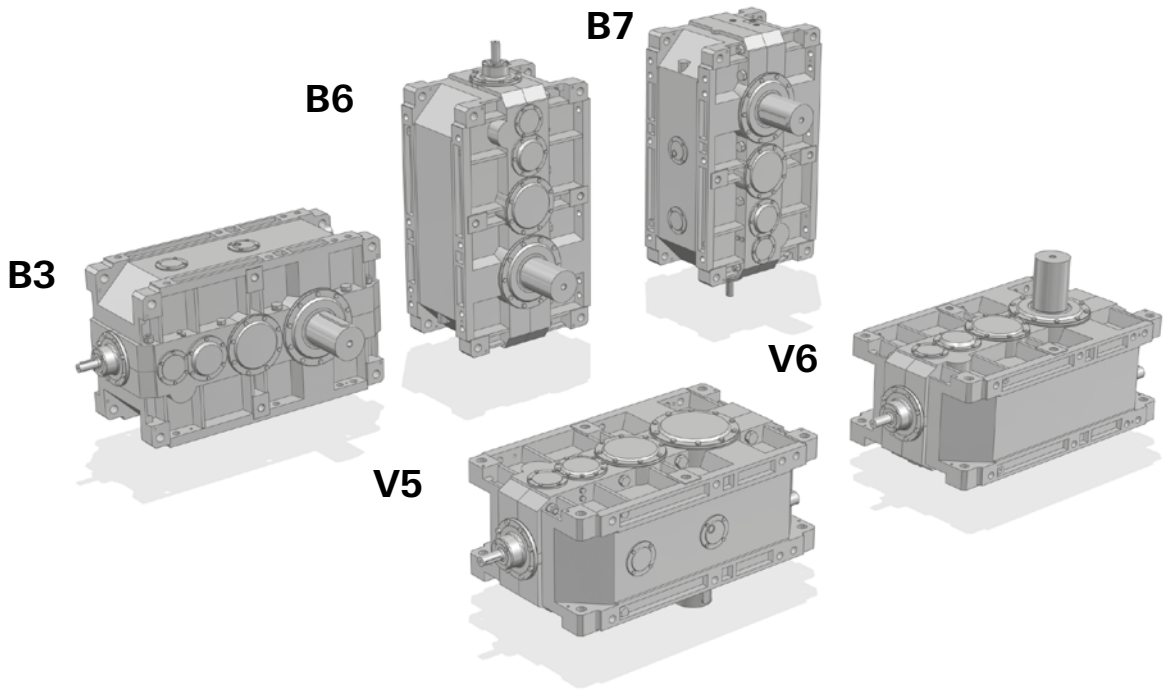




Possible high oil splash: for the corrective factor $ft_3$ of nominal thermal power $Pt_N$ see ch. 4.

Possible bearing lubrication pump: consult us for verification.

1) Mounting position **B3** may be identified from the position of the screw-heads as arrowed. The same is valid for mounting positions V5 and V6 with double extension or hollow low speed shaft: in these cases, consider the **position of low speed wheel**, for the identification of correct mounting position (see also «Designs» at the previous page).

* Valid in case of **hollow low speed shaft** (with shrink disc or keyway).

▼ Oil filler plug
● Oil level plug
■ Oil drain plug

▽ Oil filler plug on opposite side (not in view)
▨ Oil level plug on opposite side (not in view)
⊘ Oil drain plug on opposite side (not in view)

2586-01.02

## 10.3 - Gear reducers R C3I

### Lubrication - Plug position and oil quantity

Oil quantity are approximate for provisioning and can vary according to the design and specific application. The exact quantity the gear reducer is to be filled with is definitely given by the level.

**B3**

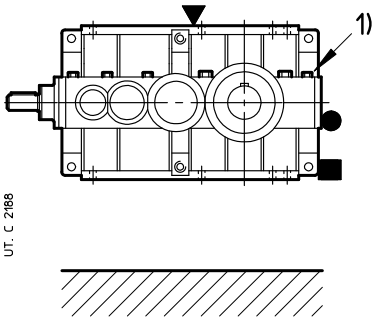


**B6**

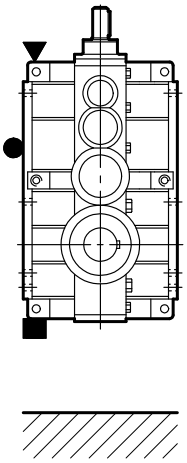

**B7**

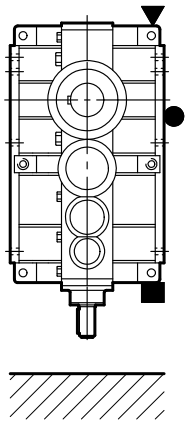

**V5**

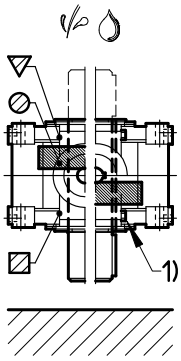


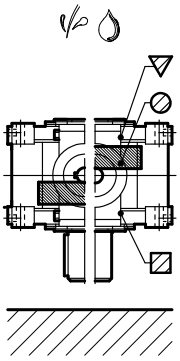

| | |
|---|---|
| UO1A<br>UO1F | UO1A sin<br>UO1F sin |
| UO1A* | UO1N sin* |

| | |
|---|---|
| UO1N | UO1N sin |

**V6**

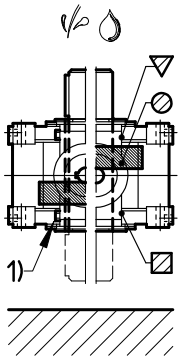


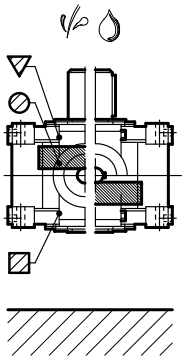

| | |
|---|---|
| UO1A<br>UO1F | UO1A sin<br>UO1F sin |
| UO1A* | UO1N sin* |

| | |
|---|---|
| UO1N | UO1N sin |

| Size | Oil quantity [l] | | | | |
|---|---|---|---|---|---|
| | B3 | B6 | B7 | V5, V6 | |
| | | | | with low speed shaft on bottom | with low speed wheel on top |
| **4000, 4001** | 150 | 280 | 224 | 250 | 265 |
| **4500, 4501** | 150 | 280 | 224 | 250 | 265 |
| **5000, 5001** | 300 | 560 | 450 | 500 | 530 |
| **5600, 5601** | 300 | 560 | 450 | 500 | 530 |
| **6300, 6301** | 425 | 850 | 630 | 710 | 750 |
| **7001** | 710 | 1320 | 1000 | 1060 | 1120 |
| **8001** | 1120 | 2240 | 1700 | 1800 | 1900 |

Notes at previous page.

Page intentionally left blank

# 11 - Radial loads

**11.1 - Radial loads $F_{r1}$ [kN] ..... 86**
V-belt drives ..... 87

**11.2 - Axial loads $F_{a2}$ [kN] or radial loads $F_{r2}$ [kN] on low speed shaft end ..... 88**
Axial loads $F_{a2}$ ..... 88
Radial loads $F_{r2}$ ..... 88

## 11.1 - Radial loads $F_{r1}$ [kN] on high speed shaft

Radial loads generated on the shaft end by a drive connecting gear reducer and motor must be less than or equal to those given in the relevant table.

| $n_1$ | $F_{r1}$ [kN] | | | | | | | | | | | | | | | | |
|---|---|---|---|---|---|---|---|---|---|---|---|---|---|---|---|---|---|
| | **4000 ... 4501** | | | **5000 ... 5601** | | | **6300 ... 6301** | | | | | **7101** | | | **8001** | | |
| min$^{-1}$ | **2I CI** | **3I C2I** | **4I C3I** | **2I** | **3I C2I** | **4I C3I** | **2I** | **3I** | **4I** | **C2I** | **C3I** | **2I** | **3I C2I** | **4I C3I** | **2I** | **3I C2I** | **4I C3I** |
| **1 800** | 20 | 12,5 | 5 | 31,5 | 20 | 8 | 40 | 25 | 10 | 20 | 8 | 63 | 40 | 12,5 | 80 | 50 | 20 |
| **1 500** | 21,2 | 13,2 | 5,3 | 33,5 | 21,2 | 8,5 | 42,5 | 26,5 | 10,6 | 21,2 | 8,5 | 67 | 42.5 | 13,2 | 85 | 53 | 21,2 |
| **1 200** | 22,4 | 14 | 5,6 | 35,5 | 22,4 | 9 | 45 | 28 | 11,2 | 22,4 | 9 | 71 | 45 | 14 | 90 | 56 | 22,4 |
| **1 000** | 23,6 | 15 | 6 | 37,5 | 23,6 | 9,5 | 47,5 | 30 | 11,8 | 23,6 | 9,5 | 75 | 47.5 | 15 | 95 | 60 | 23,6 |
| **710** | 26,5 | 17 | 6,7 | 42,5 | 26,5 | 10,6 | 53 | 33,5 | 13,2 | 26,5 | 10,6 | 85 | 53 | 17 | 106 | 67 | 26,5 |
| **560** | 28 | 18 | 7,1 | 45 | 28 | 11,2 | 56 | 35,5 | 14 | 28 | 11,2 | 90 | 56 | 18 | 112 | 71 | 28 |
| **450** | 30 | 19 | 7,5 | 47,5 | 30 | 11,8 | 60 | 37,5 | 15 | 30 | 11,8 | 95 | 60 | 19 | 118 | 75 | 30 |
| **355** | 33,5 | 21,2 | 8,5 | 53 | 33,5 | 13,2 | 67 | 42,5 | 17 | 33,5 | 13,2 | 106 | 67 | 21,2 | 132 | 85 | 33,5 |
| $F_{r1max}$ | **33,5** | **21,2** | **8,5** | **53** | **33,5** | **13,2** | **67** | **42,5** | **17** | **33,5** | **13,2** | **106** | **67** | **21,2** | **132** | **85** | **33,5** |

The radial load $F_{r1}$ given by the following formula refers to most common drives:

$$F_{r1} = \frac{28{,}65 \cdot P_1}{d \cdot n_1} \text{ [kN]}$$ for **timing belt drive**

$$F_{r1} = \frac{47{,}75 \cdot P_1}{d \cdot n_1} \text{ [kN]}$$ for **V-belt drive**

where:
$P_1$ [kW] is the power required at the input side of gear reducer;
$n_1$ [min$^{-1}$] is the angular velocity of gear reducer
$d$ [m] is the pitch diameter of pulley keyed on gear reducer high speed shaft

Radial loads given in the table are valid for overhung loads on centre line of high speed shaft end, i.e. operating at a distance of 0,5 · e (e = shaft end length) from the shoulder. If radial loads are in a different position, i.e. at a distance differing from 0,5 · e from shoulder, multiply the admissible radial load value by 1,25 (without exceeding the maximum value $F_{r1max}$, stated in the table) if acting at 0,315 · e , by 0,8 if acting at 0,8 · e .

It is always advisable **to mount the pulley against the shaft shoulder** and in any case to avoid that the pulley exceeds the shaft end.

An **axial load** of up to 0,2 times the value in the table is permissible, simultaneously with the radial load.

In absence of the radial load, an axial load may be acting on center line, not higher than 0,5 times the stated radial load.

**IMPORTANT**: tabulated values for radial load $F_{r1}$ can increase considerably in certain instances (direction of rotation, angular position of load, etc.). If necessary and/or in presence of **misaligned** axial loads, consult us.



2586-01.02

## 11.1 - Radial loads $F_{r1}$ [kN] on high speed shaft end

### V-belt drives

See the table for the driving pulleys advised for the various powers and motor polarities and the radial loads resulting on motor and gear reducer shaft ends.

The transmissions have been calculated with a service factor ⩾1,4; replace section SPA with SPB, section SPB with SPC, section SPC with 8V.in order to increase the service factor with the same d and belt number.

The radial loads have been calculated according to the formula: $(47\,750 \cdot P_1) / (d \cdot n_1)$.

The radial load $F_{r1}$, referring to the selected motor pulley, must be lower than or equal to the one admitted by gear reducer.

**IMPORTANT.** For the good running of drive and in order not to overload motor and gear reducer bearings, reduce the overhung to a minimum and do not stress belts excessively. Pulleys with d ⩾ 400 must be dynamically balanced.

| Motor | | | Driving pulley: belt number and section, pitch diameter d [mm] | | | | | | | | | Radial load $F_{r1}$ [N] | | | | | |
|---|---|---|---|---|---|---|---|---|---|---|---|---|---|---|---|---|---|
| $P_1$ kW | Size | pole number | | d | $F_{r1}$ ≈ | | d | $F_{r1}$ ≈ | | d | $F_{r1}$ ≈ | | d | $F_{r1}$ ≈ | | d | $F_{r1}$ ≈ |
| **1,1** | 80B | 2 | 2 Z | **71** | 265 | 2 Z | **80** | 236 | 2 Z | **90** | 212 | 1 Z | **100** | 190 | 1 Z | **112** | 170 |
| | 90S | 4 | 2 A | **90** | 425 | 2 A | **100** | 375 | 2 A | **112** | 335 | 1 A | **125** | 300 | 1 A | **140** | 265 |
| | 90L | 6 | 2 A | **90** | 670 | 2 A | **100** | 600 | 2 A | **112** | 530 | 2 A | **125** | 475 | 1 A | **140** | 425 |
| **1,5** | 90S | 2 | 2 A | **90** | 280 | 2 A | **100** | 250 | 1 A | **112** | 224 | 1 A | **125** | 200 | 1 A | **140** | 180 |
| | 90L | 4 | 2 A | **90** | 560 | 2 A | **100** | 500 | 2 A | **112** | 450 | 2 A | **125** | 400 | 1 A | **140** | 355 |
| | 100LA | 6 | 3 A | **90** | 900 | 3 A | **100** | 800 | 2 A | **112** | 710 | 2 A | **125** | 630 | 2 A | **140** | 560 |
| **2,2** | 90LA | 2 | 2 A | **90** | 425 | 2 A | **100** | 375 | 2 A | **112** | 335 | 2 A | **125** | 300 | 1 A | **140** | 265 |
| | 100LA | 4 | 3 A | **90** | 850 | 3 A | **100** | 750 | 3 A | **112** | 670 | 2 A | **125** | 600 | 2 A | **140** | 530 |
| | 112M | 6 | 3 A | **112** | 1060 | 3 A | **125** | 950 | 3 A | **140** | 850 | 2 A | **160** | 750 | 2 A | **180** | 670 |
| **3** | 100LA | 2 | 3 A | **90** | 560 | 3 A | **100** | 500 | 2 A | **112** | 450 | 2 A | **125** | 400 | 2 A | **140** | 355 |
| | 100LB | 4 | 3 A | **112** | 900 | 3 A | **125** | 800 | 2 A | **140** | 710 | 2 A | **160** | 630 | 2 A | **180** | 560 |
| | 132S | 6 | 3 SPA | **100** | 1600 | 3 SPA | **112** | 1400 | 2 SPA | **125** | 1250 | 2 SPA | **140** | 1120 | 2 SPA | **160** | 1000 |
| **4** | 112M | 2 | 3 A | **100** | 670 | 3 A | **112** | 600 | 2 A | **125** | 530 | 2 A | **140** | 475 | 2 A | **160** | 425 |
| | 112M | 4 | 3 A | **125** | 1060 | 3 A | **140** | 950 | 3 A | **160** | 850 | 2 A | **180** | 750 | 2 A | **200** | 670 |
| | 132M | 6 | 3 SPA | **112** | 1900 | 3 SPA | **125** | 1700 | 2 SPA | **140** | 1500 | 2 SPA | **160** | 1320 | 2 SPA | **180** | 1180 |
| **5,5** | 132S | 2 | 3 SPA | **100** | 950 | 3 SPA | **112** | 850 | 2 SPA | **125** | 750 | 2 SPA | **140** | 670 | 2 SPA | **160** | 600 |
| | 132S | 4 | 3 SPA | **112** | 1700 | 3 SPA | **125** | 1500 | 2 SPA | **140** | 1320 | 2 SPA | **160** | 1180 | 2 SPA | **180** | 1060 |
| | 132MB | 6 | 3 SPA | **140** | 2120 | 3 SPA | **160** | 1900 | 2 SPA | **180** | 1700 | 2 SPA | **200** | 1500 | 2 SPA | **224** | 1320 |
| **7,5** | 132SB (SC) | 2 | 3 SPA | **112** | 1120 | 3 SPA | **125** | 1000 | 2 SPA | **140** | 900 | 2 SPA | **160** | 800 | 2 SPA | **180** | 710 |
| **(9,2)** | 132M (MB) | 4 | 3 SPA | **125**[1)] | 2000 | 3 SPA | **140** | 1800 | 2 SPA | **160** | 1600 | 2 SPA | **180** | 1400 | 2 SPA | **200** | 1250 |
| | 160M | 6 | 3 SPA | **160** | 2500 | 3 SPA | **180** | 2240 | 3 SPA | **200** | 2000 | 2 SPA | **224** | 1800 | 2 SPA | **250** | 1600 |
| **11** | 160MR | 2 | 3 SPA | **125** | 1500 | 3 SPA | **140** | 1320 | 2 SPA | **160** | 1180 | 2 SPA | **180** | 1060 | 2 SPA | **200** | 950 |
| | 160M | 4 | 3 SPA | **160** | 2360 | 3 SPA | **180** | 2120 | 3 SPA | **200** | 1900 | 2 SPA | **224** | 1700 | 2 SPA | **250** | 1500 |
| | 160L | 6 | 3 SPA | **200** | 3000 | 3 SPA | **224** | 2650 | 3 SPA | **250** | 2360 | 2 SPA | **280** | 2120 | 2 SPA | **315** | 1900 |
| **15** | 160M | 2 | 3 SPA | **140** | 1800 | 3 SPA | **160** | 1600 | 3 SPA | **180** | 1400 | 2 SPA | **200** | 1250 | 2 SPA | **224** | 1120 |
| | 160L | 4 | 3 SPA | **180** | 2800 | 3 SPA | **200** | 2500 | 3 SPA | **224** | 2240 | 3 SPA | **250** | 2000 | 2 SPA | **280** | 1800 |
| | 180L | 6 | 4 SPA | **200** | 4000 | 4 SPA | **224** | 3550 | 4 SPA | **250** | 3150 | 3 SPA | **280** | 2800 | 3 SPA | **315** | 2500 |
| **18,5** | 160L | 2 | 3 SPA | **160** | 2000 | 3 SPA | **180** | 1800 | 3 SPA | **200** | 1600 | 3 SPA | **224** | 1400 | 2 SPA | **250** | 1250 |
| | 180M | 4 | 4 SPA | **180** | 3550 | 4 SPA | **200** | 3150 | 4 SPA | **224** | 2800 | 3 SPA | **250** | 2500 | 3 SPA | **280** | 2240 |
| | 200LR | 6 | 4 SPB | **200** | 5000 | 4 SPB | **224** | 4500 | 3 SPB | **250** | 4000 | 3 SPB | **280** | 3550 | 3 SPB | **315** | 3150 |
| **22** | 180L | 4 | 4 SPA | **200** | 3750 | 4 SPA | **224** | 3550 | 4 SPA | **250** | 3000 | 3 SPA | **280** | 2650 | 3 SPA | **315** | 2360 |
| | 200L | 6 | 4 SPB | **224** | 5300 | 4 SPB | **250** | 4750 | 3 SPB | **280** | 4250 | 3 SPB | **315** | 3750 | 3 SPB | **355** | 3550 |
| **30** | 200L | 4 | 4 SPB | **224** | 4500 | 4 SPB | **250** | 4000 | 3 SPB | **280** | 3550 | 3 SPB | **315** | 3150 | 3 SPB | **355** | 2800 |
| | 225M | 6 | 5 SPB | **250** | 6300 | 5 SPB | **280** | 5600 | 4 SPB | **315** | 5000 | 4 SPB | **355** | 4500 | 4 SPB | **400** | 4000 |
| **37** | 225S | 4 | 5 SPB | **224** | 5600 | 5 SPB | **250** | 5000 | 4 SPB | **280** | 4500 | 4 SPB | **315** | 4000 | 4 SPB | **355** | 3550 |
| | 250M | 6 | 6 SPB | **250** | 8000 | 6 SPB | **280** | 7100 | 5 SPB | **315** | 6300 | 5 SPB | **355** | 5600 | 5 SPB | **400** | 5000 |
| **45** | 225M | 4 | 5 SPB | **250** | 6000 | 5 SPB | **280** | 5300 | 4 SPB | **315** | 4750 | 4 SPB | **355** | 4250 | 4 SPB | **400** | 3750 |
| **55** | 250M | 4 | 6 SPB | **250** | 7500 | 6 SPB | **280** | 6700 | 5 SPB | **315** | 6000 | 5 SPB | **355** | 5300 | 5 SPB | **400** | 4750 |
| **75** | 280S | 4 | 6 SPB | **280** | 9000 | 5 SPB | **315** | 8000 | 5 SPB | **355** | 7100 | 5 SPB | **400** | 6400 | – | – | – |
| **90** | 280M | 4 | 6 SPB | **315** | 9000 | 5 SPC | **315** | 9000 | 5 SPC | **355** | 8000 | 4 SPC | **400** | 7100 | – | – | – |
| **110** | 315S | 4 | 6 SPC | **315** | 11000 | 5 SPC | **355** | 10000 | 4 SPC | **400** | 8800 | – | – | – | – | – | – |
| **132** | 315M | 4 | 6 SPC | **355** | 12000 | 5 SPC | **400** | 10600 | 4 SPC | **450** | 10600 | – | – | – | – | – | – |
| **160** | 315MC | 4 | 6 SPC | **400** | 13000 | 6 SPC | **450** | 11500 | 5 8V | **450** | 11500 | – | – | – | – | – | – |

1) Not valid for power 9,2 kW: d ⩾ 140 mm.

Note: Pulley face width: **1 Z** 16, **2 Z** 28, **1 A** 20, **2 A-2 SPA** 35, **3 A-3 SPA** 50, **4 SPA** 65, **3 SPB** 63, **4 SPB** 82, **5 SPB** 101, **6 SPB** 120, **4 SPC** 110, **5 SPC** 136, **6 SPC** 162, **5 8V** 152.



2586-01.02

## 11.2 - Axial loads $F_{a2}$ [kN] or radial loads $F_{r2}$ [kN] on low speed shaft end

### Axial loads $F_{a2}$

Permissible $F_{a2}$ is shown in the column where direction of rotation of low speed shaft (black or white arrow) and direction of the axial force (solid or broken arrow) correspond to those of the gear reducer in question. Direction of rotation and direction of axial force may be established viewing the gear reducer from any point of the two output sides of low speed shaft, providing the same point is adopted for rotation and axial load (see fig. below).

Notes:

– white and black arrows of present chapter do not refer to the ones stating the correspondence of direction of rotation for the different designs (see ch. 8, 10, 12, 14);

– wherever possible, choose the load conditions corresponding to the column with highest admissible values.

– values stated in the table are valid for the center line axial load; in the event of a misaligned axial load, consult us.

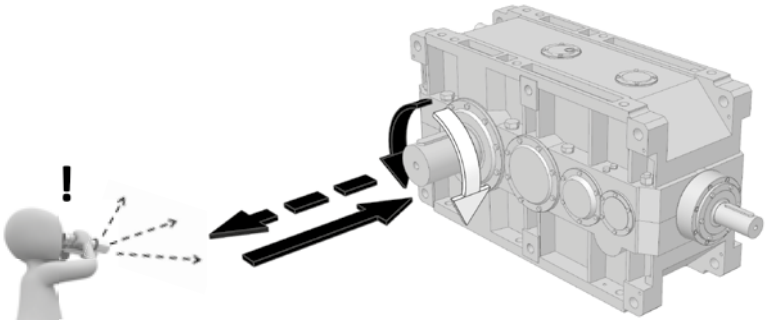

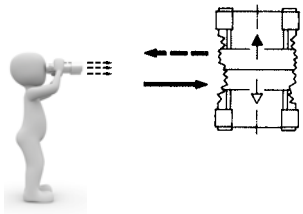

### Radial loads $F_{r2}$

Radial loads generated on the shaft end by a drive connecting gear reducer and motor must be less than or equal to those given in the relevant tables in the following pages.

Normally, radial loads on low speed shaft ends are considerable: in fact there is a tendency to connect the gear reducer to the machine by means of a transmission with high transmission ratio (economizing on the gear reducer) and with small diameters (economizing on the drive, and for requirements dictated by overall dimensions). Bearing life and wear (which also affect gears unfavorably) and low speed shaft strength, clearly impose limits on permissible radial load.

Permissible radial loads given in the tables are therefore based on: the low speed shaft side where radial load is applied according to the design (see ch. 8 and 10), the product of speed $n_2$ [min$^{-1}$] for the bearing duration $L_h$ [h] required, the direction of rotation, the angular position φ [°] the load and torque $M_2$ [kN m] required.

Permissible radial loads given in the tables are valid for overhung loads on center line of high speed shaft end, i.e. operating at a distance of 0,5 · E (E = shaft end length) from the shoulder. If radial loads are in a different position, i.e. at a distance differing from 0,5 E from shoulder, re-calculate the permissible value of radial load according to the following formula, trying not to exceed the maximum value $F_{r2max}$, stated in the tables:

**For radial loads acting simultaneously on both sides of double extension low speed shaft or for hollow low speed shaft, consult us.**

$$F'_{r2} = F_{r2} \cdot \frac{E/2 + y}{x + y} \text{ [kN]}$$

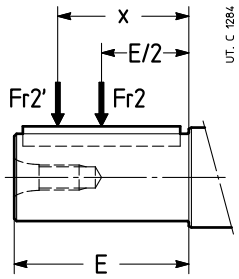


where:

$F_{r2}'$ [N] is the permissible radial load acting at the distance x from shaft shoulder;

$F_{r2}$ [N] ] is the permissible radial load acting on center line of high speed shaft end (see table on next page);

E [mm] is the shaft end length (see ch. 7, 9);

y [mm] is given in the table;

x [mm] is the distance between the shaft shoulder and the load application point.

| | Gear reducer size | | | | | | | | | | | |
|---|---|---|---|---|---|---|---|---|---|---|---|---|
| | **4000** | **4001** | **4500** | **4501** | **5000** | **5001** | **5600** | **5601** | **6300** | **6301** | **7101** | **8001** |
| **y** | 561 | 554 | 612 | 594 | 700 | 694 | 765 | 742 | 823 | 823 | 1010 | 1142 |

11

2586-01.02

## 11.2 - Axial loads $F_{a2}$ [kN] or radial loads $F_{r2}$ [kN] on low speed shaft end

Radial load $F_{r2}$ for most common drives has the following value and angular position:

ROTATION

$$F_{r2} = \frac{19{,}1 \cdot P_2}{d \cdot n_2} \text{ [kN]}$$

for chain drive (lifting in general);
for chain drive replace
19,1 with 28,65

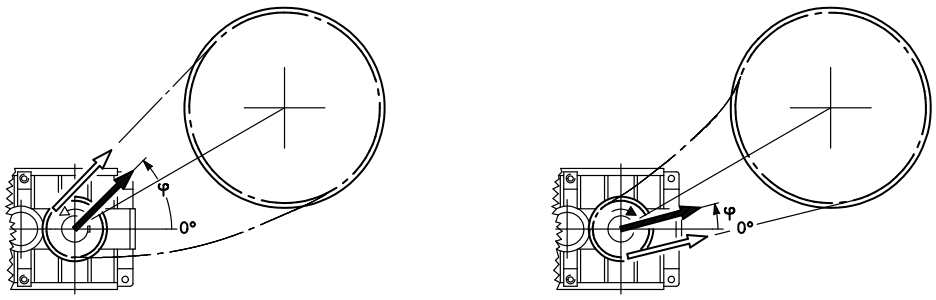


$$F_{r2} = \frac{47{,}75 \cdot P_2}{d \cdot n_2} \text{ [kN]}$$

for V-belt drive

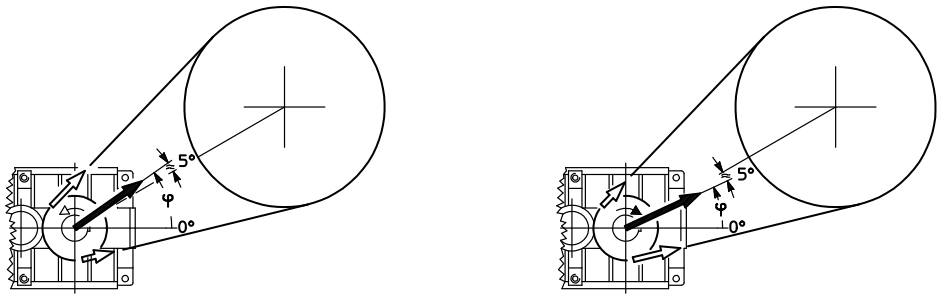


$$F_{r2} = \frac{20{,}32 \cdot P_2}{d \cdot n_2} \text{ [kN]}$$

for spur gear pair drive

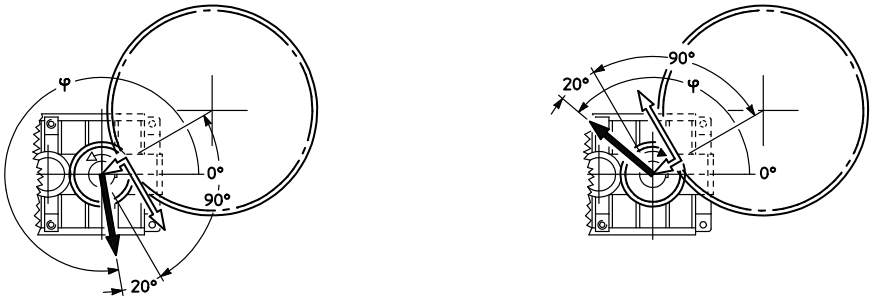


$$F_{r2} = \frac{67{,}81 \cdot P_2}{d \cdot n_2} \text{ [kN]}$$

for friction wheel drive (rubber-on-metal)

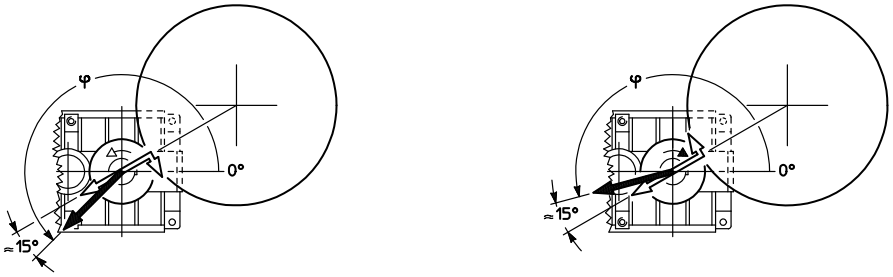


UT. C 787

where: $P_2$ [kW] is power required at the output side of the gear reducer, $n_2$ [min$^{-1}$] is the speed, d [m] is the pitch diameter.

**IMPORTANT**: 0° coincides with a straight line concurrent with the axis of the last reduction and orientated as shown above, and therefore it follows the rotation of the housing, as shown below.

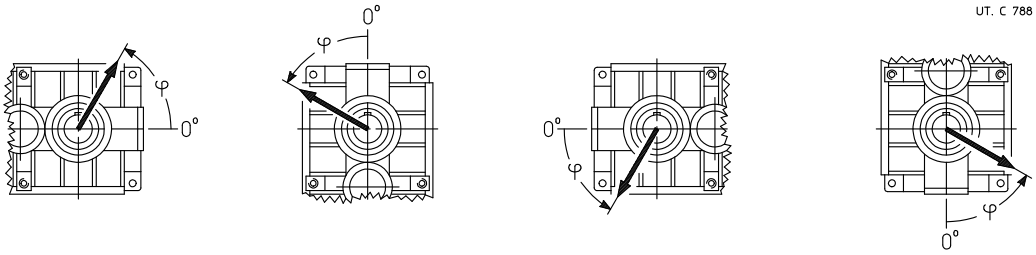


UT. C 788

11

2586-01.02

## 11.2 - Axial loads $F_{a2}$ [kN] or radial loads $F_{r2}$ [kN] on low speed shaft end

Radial load on **opposite low speed wheel end**[3)]

size **4000**

| $n_2 \cdot L_h$ | $M_2$ | $F_{r2}$ [1) 2)] | | | | | | | | | | | | | | | | $F_{a2}$ [1)] | |
|---|---|---|---|---|---|---|---|---|---|---|---|---|---|---|---|---|---|---|---|
| min⁻¹·h | kN m | **0** | **45** | **90** | **135** | **180** | **225** | **270** | **315** | **0** | **45** | **90** | **135** | **180** | **225** | **270** | **315** | | |
| **355 000** | 80 | 200 | 200 | 200 | 200 | 200 | 200 | 200 | 200 | 170 | 150 | 160 | 200 | 200 | 200 | 200 | 200 | 31,5 | 80 |
| | 56 | 200 | 200 | 200 | 200 | 200 | 200 | 200 | 200 | 200 | 200 | 200 | 200 | 200 | 200 | 200 | 200 | 40 | 80 |
| **450 000** | 80 | 200 | 200 | 200 | 200 | 200 | 200 | 200 | 200 | 150 | 125 | 140 | 180 | 200 | 200 | 200 | 200 | 25 | 80 |
| | 56 | 200 | 200 | 200 | 200 | 200 | 200 | 200 | 200 | 200 | 180 | 190 | 200 | 200 | 200 | 200 | 200 | 40 | 80 |
| **560 000** | 80 | 200 | 200 | 170 | 150 | 200 | 200 | 200 | 200 | 125 | 106 | 118 | 160 | 200 | 200 | 200 | 170 | 18 | 80 |
| | 56 | 200 | 200 | 200 | 200 | 200 | 200 | 200 | 200 | 180 | 160 | 170 | 200 | 200 | 200 | 200 | 200 | 40 | 80 |
| **710 000** | 80 | 200 | 200 | 106 | 95 | 150 | 200 | 200 | 200 | 106 | 90 | 100 | 140 | 200 | 200 | 200 | 150 | 12,5 | 80 |
| | 56 | 200 | 200 | 200 | 200 | 200 | 200 | 200 | 200 | 160 | 140 | 150 | 180 | 200 | 200 | 200 | 190 | 33,5 | 80 |
| **900 000** | 80 | 200 | 95 | 40 | 35,5 | 60 | 200 | 190 | 200 | 85 | 67 | 75 | 118 | 180 | 200 | 190 | 132 | 9 | 80 |
| | 56 | 200 | 200 | 200 | 200 | 200 | 200 | 200 | 200 | 140 | 125 | 132 | 160 | 200 | 200 | 200 | 170 | 28 | 80 |
| | 40 | 200 | 200 | 200 | 200 | 200 | 200 | 200 | 200 | 170 | 160 | 170 | 190 | 200 | 200 | 200 | 200 | 40 | 80 |
| **1 120 000** | 56 | 200 | 200 | 200 | 200 | 200 | 200 | 190 | 200 | 125 | 106 | 118 | 150 | 190 | 200 | 200 | 160 | 23,6 | 80 |
| | 40 | 200 | 200 | 200 | 200 | 200 | 200 | 200 | 200 | 150 | 140 | 150 | 170 | 200 | 200 | 200 | 180 | 37,5 | 80 |
| **1 400 000** | 56 | 200 | 200 | 170 | 160 | 200 | 180 | 180 | 190 | 106 | 95 | 100 | 132 | 170 | 200 | 180 | 140 | 18 | 80 |
| | 40 | 200 | 200 | 200 | 200 | 200 | 190 | 190 | 200 | 140 | 125 | 132 | 160 | 190 | 200 | 190 | 160 | 33,5 | 80 |
| **1 800 000** | 56 | 200 | 200 | 118 | 112 | 160 | 170 | 160 | 170 | 90 | 75 | 85 | 112 | 160 | 180 | 170 | 125 | 13,2 | 80 |
| | 40 | 200 | 200 | 200 | 200 | 200 | 180 | 170 | 180 | 125 | 112 | 118 | 140 | 170 | 190 | 180 | 150 | 28 | 75 |
| **2 240 000** | 56 | 190 | 150 | 80 | 75 | 112 | 150 | 150 | 160 | 75 | 63 | 71 | 100 | 140 | 170 | 150 | 112 | 9 | 75 |
| | 40 | 190 | 200 | 200 | 200 | 180 | 160 | 160 | 170 | 112 | 100 | 106 | 125 | 160 | 170 | 160 | 132 | 23,6 | 71 |
| **2 800 000** | 40 | 170 | 200 | 180 | 170 | 170 | 150 | 150 | 150 | 100 | 90 | 95 | 118 | 140 | 160 | 150 | 125 | 20 | 67 |
| | 28 | 180 | 190 | 200 | 190 | 170 | 160 | 150 | 160 | 125 | 112 | 118 | 132 | 150 | 170 | 160 | 140 | 31,5 | 63 |
| **3 550 000** | 40 | 160 | 180 | 150 | 140 | 160 | 140 | 132 | 140 | 85 | 75 | 80 | 100 | 132 | 150 | 140 | 112 | 16 | 63 |
| | 28 | 160 | 180 | 180 | 180 | 160 | 150 | 140 | 150 | 112 | 100 | 106 | 125 | 140 | 150 | 150 | 125 | 26,5 | 60 |
| **4 500 000** | 40 | 150 | 170 | 112 | 106 | 150 | 132 | 125 | 132 | 75 | 63 | 71 | 90 | 118 | 140 | 125 | 100 | 12,5 | 60 |
| | 28 | 150 | 170 | 170 | 160 | 150 | 140 | 132 | 140 | 100 | 90 | 95 | 112 | 132 | 140 | 132 | 118 | 23,6 | 56 |
| max **200** | | | | | | | | | | | | | | | | | | max **40** | max **80** |

size **4001**

| | | | | | | | | | | | | | | | | | | | |
|---|---|---|---|---|---|---|---|---|---|---|---|---|---|---|---|---|---|---|---|
| **355 000** | 95 | 200 | 200 | 200 | 200 | 200 | 200 | 200 | 200 | 200 | 200 | 200 | 200 | 200 | 200 | 200 | 200 | 40 | 80 |
| | 67 | 200 | 200 | 200 | 200 | 200 | 200 | 200 | 200 | 200 | 200 | 200 | 200 | 200 | 200 | 200 | 200 | 40 | 80 |
| **450 000** | 95 | 200 | 200 | 200 | 200 | 200 | 200 | 200 | 200 | 200 | 200 | 200 | 200 | 200 | 200 | 200 | 200 | 40 | 80 |
| | 67 | 200 | 200 | 200 | 200 | 200 | 200 | 200 | 200 | 200 | 200 | 200 | 200 | 200 | 200 | 200 | 200 | 40 | 80 |
| **560 000** | 95 | 200 | 200 | 200 | 200 | 200 | 200 | 200 | 200 | 200 | 190 | 200 | 200 | 200 | 200 | 200 | 200 | 40 | 80 |
| | 67 | 200 | 200 | 200 | 200 | 200 | 200 | 200 | 200 | 200 | 200 | 200 | 200 | 200 | 200 | 200 | 200 | 40 | 80 |
| **710 000** | 95 | 200 | 200 | 200 | 200 | 200 | 200 | 200 | 200 | 190 | 170 | 180 | 200 | 200 | 200 | 200 | 200 | 40 | 80 |
| | 67 | 200 | 200 | 200 | 200 | 200 | 200 | 200 | 200 | 200 | 200 | 200 | 200 | 200 | 200 | 200 | 200 | 40 | 80 |
| **900 000** | 95 | 200 | 200 | 200 | 200 | 200 | 200 | 200 | 200 | 170 | 140 | 150 | 200 | 200 | 200 | 200 | 200 | 37,5 | 80 |
| | 67 | 200 | 200 | 200 | 200 | 200 | 200 | 200 | 200 | 200 | 200 | 200 | 200 | 200 | 200 | 200 | 200 | 40 | 80 |
| | 47,5 | 200 | 200 | 200 | 200 | 200 | 200 | 200 | 200 | 200 | 200 | 200 | 200 | 200 | 200 | 200 | 200 | 40 | 80 |
| **1 120 000** | 67 | 200 | 200 | 200 | 200 | 200 | 200 | 200 | 200 | 200 | 180 | 190 | 200 | 200 | 200 | 200 | 200 | 40 | 80 |
| | 47,5 | 200 | 200 | 200 | 200 | 200 | 200 | 200 | 200 | 200 | 200 | 200 | 200 | 200 | 200 | 200 | 200 | 40 | 80 |
| **1 400 000** | 67 | 200 | 200 | 200 | 200 | 200 | 200 | 200 | 200 | 180 | 160 | 170 | 200 | 200 | 200 | 200 | 200 | 40 | 80 |
| | 47,5 | 200 | 200 | 200 | 200 | 200 | 200 | 200 | 200 | 200 | 200 | 200 | 200 | 200 | 200 | 200 | 200 | 40 | 80 |
| **1 800 000** | 67 | 200 | 200 | 200 | 200 | 200 | 200 | 200 | 200 | 150 | 140 | 150 | 180 | 200 | 200 | 200 | 200 | 40 | 80 |
| | 47,5 | 200 | 200 | 200 | 200 | 200 | 200 | 200 | 200 | 190 | 180 | 190 | 200 | 200 | 200 | 200 | 200 | 40 | 80 |
| **2 240 000** | 67 | 200 | 200 | 200 | 200 | 200 | 200 | 200 | 200 | 140 | 118 | 132 | 170 | 200 | 200 | 200 | 180 | 35,5 | 80 |
| | 47,5 | 200 | 200 | 200 | 200 | 200 | 200 | 200 | 200 | 170 | 160 | 170 | 190 | 200 | 200 | 200 | 200 | 40 | 80 |
| **2 800 000** | 47,5 | 200 | 200 | 200 | 200 | 200 | 200 | 200 | 200 | 160 | 140 | 150 | 180 | 200 | 200 | 200 | 190 | 40 | 80 |
| | 33,5 | 200 | 200 | 200 | 200 | 200 | 200 | 200 | 200 | 180 | 170 | 180 | 200 | 200 | 200 | 200 | 200 | 40 | 80 |
| **3 550 000** | 47,5 | 200 | 200 | 200 | 200 | 200 | 190 | 180 | 190 | 140 | 125 | 132 | 160 | 200 | 200 | 200 | 170 | 40 | 80 |
| | 33,5 | 200 | 200 | 200 | 200 | 200 | 200 | 190 | 200 | 160 | 150 | 160 | 180 | 200 | 200 | 200 | 190 | 40 | 80 |
| **4 500 000** | 47,5 | 200 | 200 | 200 | 200 | 200 | 180 | 170 | 180 | 125 | 112 | 118 | 140 | 180 | 200 | 190 | 160 | 35,5 | 80 |
| | 33,5 | 200 | 200 | 200 | 200 | 200 | 190 | 180 | 190 | 150 | 140 | 140 | 160 | 190 | 200 | 200 | 170 | 40 | 80 |
| max **200** | | | | | | | | | | | | | | | | | | max **40** | max **80** |

1) An axial load of up to 0,2 times the value in the table is permissible, simultaneously with the radial load. If exceeded consult us.
2) An unfavorable direction of load can limit $F_{r2}$ to $0,9 \cdot F_{r2max}$.
3) For radial loads acting simultaneously on both sides of double extension low speed shaft or for hollow low speed shaft, consult us.

## 11.2 - Axial loads $F_{a2}$ [kN] or radial loads $F_{r2}$ [kN] on low speed shaft end

Radial load on **low speed wheel end**[3)]

size **4000**

| $n_2 \cdot L_h$ | $M_2$ | $F_{r2}$ [1) 2)] | | | | | | | | | | | | | | | | $F_{a2}$ [1)] | |
|---|---|---|---|---|---|---|---|---|---|---|---|---|---|---|---|---|---|---|---|
| | | 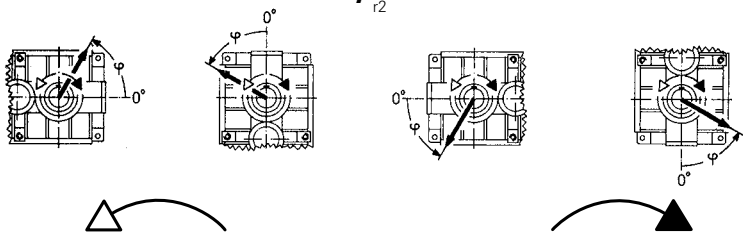 | | | | | | | | | | | | | | | | | |
| min⁻¹·h | kN m | **0** | **45** | **90** | **135** | **180** | **225** | **270** | **315** | **0** | **45** | **90** | **135** | **180** | **225** | **270** | **315** | | |
| **355 000** | 80 | 200 | 200 | 200 | 200 | 200 | 200 | 200 | 200 | 125 | 95 | 100 | 150 | 200 | 200 | 200 | 200 | 31,5 | 80 |
| | 56 | 200 | 200 | 200 | 200 | 200 | 200 | 200 | 200 | 200 | 160 | 170 | 200 | 200 | 200 | 200 | 200 | 40 | 80 |
| **450 000** | 80 | 200 | 200 | 200 | 200 | 200 | 200 | 190 | 200 | 100 | 71 | 75 | 125 | 200 | 200 | 200 | 190 | 25 | 80 |
| | 56 | 200 | 200 | 200 | 200 | 200 | 200 | 200 | 200 | 170 | 140 | 150 | 190 | 200 | 200 | 200 | 200 | 40 | 80 |
| **560 000** | 80 | 200 | 200 | 200 | 200 | 200 | 200 | 170 | 180 | 75 | 53 | 56 | 100 | 200 | 200 | 200 | 160 | 18 | 80 |
| | 56 | 200 | 200 | 200 | 200 | 200 | 200 | 200 | 200 | 150 | 125 | 132 | 170 | 200 | 200 | 200 | 200 | 40 | 80 |
| **710 000** | 80 | 200 | 200 | 200 | 200 | 200 | 180 | 150 | 160 | 50 | 33,5 | 35,5 | 71 | 190 | 200 | 200 | 132 | 12,5 | 80 |
| | 56 | 200 | 200 | 200 | 200 | 200 | 200 | 190 | 200 | 132 | 106 | 112 | 150 | 200 | 200 | 200 | 190 | 33,5 | 80 |
| **900 000** | 80 | 200 | 200 | 200 | 200 | 200 | 160 | 132 | 140 | – | – | – | 33,5 | 160 | 200 | 200 | 95 | 10 | 80 |
| | 56 | 200 | 200 | 200 | 200 | 200 | 190 | 170 | 180 | 112 | 85 | 90 | 132 | 200 | 200 | 200 | 170 | 28 | 80 |
| | 40 | 200 | 200 | 200 | 200 | 200 | 200 | 190 | 200 | 150 | 132 | 140 | 170 | 200 | 200 | 200 | 200 | 40 | 80 |
| **1 120 000** | 56 | 200 | 200 | 200 | 200 | 200 | 170 | 150 | 160 | 90 | 67 | 75 | 112 | 190 | 200 | 200 | 150 | 23,6 | 80 |
| | 40 | 200 | 200 | 200 | 200 | 200 | 190 | 170 | 180 | 140 | 118 | 118 | 150 | 200 | 200 | 200 | 180 | 37,5 | 80 |
| **1 400 000** | 56 | 190 | 200 | 200 | 200 | 200 | 160 | 140 | 150 | 75 | 53 | 56 | 90 | 170 | 200 | 200 | 140 | 18 | 80 |
| | 40 | 200 | 200 | 200 | 200 | 200 | 180 | 160 | 170 | 125 | 100 | 106 | 140 | 190 | 200 | 200 | 170 | 33,5 | 80 |
| **1 800 000** | 56 | 170 | 200 | 200 | 200 | 200 | 140 | 118 | 132 | 56 | 37,5 | 42,5 | 71 | 150 | 200 | 200 | 118 | 13,2 | 80 |
| | 40 | 180 | 200 | 200 | 200 | 200 | 160 | 140 | 150 | 106 | 85 | 90 | 118 | 170 | 200 | 200 | 150 | 28 | 75 |
| **2 240 000** | 56 | 160 | 200 | 200 | 190 | 180 | 132 | 106 | 118 | 37,5 | – | – | 53 | 132 | 200 | 190 | 100 | 10 | 75 |
| | 40 | 170 | 200 | 200 | 200 | 190 | 150 | 132 | 140 | 90 | 71 | 75 | 106 | 160 | 200 | 190 | 140 | 23,6 | 71 |
| **2 800 000** | 40 | 160 | 200 | 200 | 200 | 170 | 132 | 118 | 125 | 75 | 60 | 63 | 90 | 140 | 190 | 180 | 125 | 20 | 67 |
| | 28 | 160 | 200 | 200 | 200 | 180 | 150 | 132 | 140 | 112 | 95 | 100 | 125 | 160 | 180 | 180 | 140 | 31,5 | 63 |
| **3 550 000** | 40 | 140 | 190 | 200 | 200 | 160 | 125 | 106 | 112 | 63 | 47,5 | 50 | 75 | 132 | 180 | 160 | 112 | 16 | 63 |
| | 28 | 150 | 180 | 200 | 190 | 160 | 140 | 125 | 132 | 100 | 80 | 85 | 112 | 140 | 170 | 160 | 132 | 26,5 | 60 |
| **4 500 000** | 40 | 132 | 180 | 200 | 190 | 150 | 112 | 95 | 100 | 50 | 37,5 | 40 | 63 | 118 | 160 | 150 | 95 | 12,5 | 60 |
| | 28 | 140 | 170 | 190 | 180 | 150 | 125 | 112 | 118 | 85 | 71 | 75 | 95 | 132 | 160 | 150 | 118 | 23,6 | 56 |
| max **200** | | | | | | | | | | | | | | | | | | max **40** | max **80** |

size **4001**

| | | | | | | | | | | | | | | | | | | | |
|---|---|---|---|---|---|---|---|---|---|---|---|---|---|---|---|---|---|---|---|
| **355 000** | 95 | 200 | 200 | 200 | 200 | 200 | 200 | 200 | 200 | 200 | 180 | 190 | 200 | 200 | 200 | 200 | 200 | 40 | 80 |
| | 67 | 200 | 200 | 200 | 200 | 200 | 200 | 200 | 200 | 200 | 200 | 200 | 200 | 200 | 200 | 200 | 200 | 40 | 80 |
| **450 000** | 95 | 200 | 200 | 200 | 200 | 200 | 200 | 200 | 200 | 200 | 150 | 160 | 200 | 200 | 200 | 200 | 200 | 40 | 80 |
| | 67 | 200 | 200 | 200 | 200 | 200 | 200 | 200 | 200 | 200 | 200 | 200 | 200 | 200 | 200 | 200 | 200 | 40 | 80 |
| **560 000** | 95 | 200 | 200 | 200 | 200 | 200 | 200 | 200 | 200 | 170 | 125 | 132 | 200 | 200 | 200 | 200 | 200 | 40 | 80 |
| | 67 | 200 | 200 | 200 | 200 | 200 | 200 | 200 | 200 | 200 | 200 | 200 | 200 | 200 | 200 | 200 | 200 | 40 | 80 |
| **710 000** | 95 | 200 | 200 | 200 | 200 | 200 | 200 | 200 | 200 | 140 | 100 | 106 | 170 | 200 | 200 | 200 | 200 | 40 | 80 |
| | 67 | 200 | 200 | 200 | 200 | 200 | 200 | 200 | 200 | 200 | 180 | 180 | 200 | 200 | 200 | 200 | 200 | 40 | 80 |
| **900 000** | 95 | 200 | 200 | 200 | 200 | 200 | 200 | 190 | 200 | 106 | 75 | 80 | 132 | 200 | 200 | 200 | 200 | 33,5 | 80 |
| | 67 | 200 | 200 | 200 | 200 | 200 | 200 | 200 | 200 | 190 | 150 | 160 | 200 | 200 | 200 | 200 | 200 | 40 | 80 |
| | 47,5 | 200 | 200 | 200 | 200 | 200 | 200 | 200 | 200 | 200 | 200 | 200 | 200 | 200 | 200 | 200 | 200 | 40 | 80 |
| **1 120 000** | 67 | 200 | 200 | 200 | 200 | 200 | 200 | 200 | 200 | 160 | 132 | 140 | 190 | 200 | 200 | 200 | 200 | 40 | 80 |
| | 47,5 | 200 | 200 | 200 | 200 | 200 | 200 | 200 | 200 | 200 | 180 | 190 | 200 | 200 | 200 | 200 | 200 | 40 | 80 |
| **1 400 000** | 67 | 200 | 200 | 200 | 200 | 200 | 200 | 190 | 200 | 140 | 112 | 118 | 170 | 200 | 200 | 200 | 200 | 40 | 80 |
| | 47,5 | 200 | 200 | 200 | 200 | 200 | 200 | 200 | 200 | 190 | 160 | 170 | 200 | 200 | 200 | 200 | 200 | 40 | 80 |
| **1 800 000** | 67 | 200 | 200 | 200 | 200 | 200 | 200 | 170 | 180 | 118 | 90 | 95 | 140 | 200 | 200 | 200 | 200 | 37,5 | 80 |
| | 47,5 | 200 | 200 | 200 | 200 | 200 | 200 | 200 | 200 | 170 | 140 | 150 | 190 | 200 | 200 | 200 | 200 | 40 | 80 |
| **2 240 000** | 67 | 200 | 200 | 200 | 200 | 200 | 180 | 150 | 170 | 100 | 71 | 75 | 118 | 200 | 200 | 200 | 180 | 30 | 80 |
| | 47,5 | 200 | 200 | 200 | 200 | 200 | 200 | 180 | 190 | 150 | 125 | 132 | 170 | 200 | 200 | 200 | 200 | 40 | 80 |
| **2 800 000** | 47,5 | 200 | 200 | 200 | 200 | 200 | 190 | 170 | 180 | 132 | 106 | 112 | 150 | 200 | 200 | 200 | 190 | 40 | 80 |
| | 33,5 | 200 | 200 | 200 | 200 | 200 | 200 | 190 | 190 | 170 | 150 | 150 | 180 | 200 | 200 | 200 | 200 | 40 | 80 |
| **3 550 000** | 47,5 | 200 | 200 | 200 | 200 | 200 | 170 | 150 | 160 | 118 | 90 | 95 | 132 | 200 | 200 | 200 | 170 | 37,5 | 80 |
| | 33,5 | 200 | 200 | 200 | 200 | 200 | 190 | 170 | 180 | 150 | 132 | 132 | 160 | 200 | 200 | 200 | 190 | 40 | 80 |
| **4 500 000** | 47,5 | 180 | 200 | 200 | 200 | 200 | 160 | 132 | 140 | 100 | 75 | 80 | 118 | 180 | 200 | 200 | 160 | 31,5 | 80 |
| | 33,5 | 190 | 200 | 200 | 200 | 200 | 170 | 160 | 160 | 132 | 118 | 118 | 150 | 190 | 200 | 200 | 180 | 40 | 80 |
| max **200** | | | | | | | | | | | | | | | | | | max **40** | max **80** |

1) An axial load of up to 0,2 times the value in the table is permissible, simultaneously with the radial load. If exceeded consult us.
2) An unfavorable direction of load can limit $F_{r2}$ to $0,9 \cdot F_{r2max}$.
3) For radial loads acting simultaneously on both sides of double extension low speed shaft or for hollow low speed shaft, consult us.

## 11.2 - Axial loads $F_{a2}$ [kN] or radial loads $F_{r2}$ [kN] on low speed shaft end

Radial load on **opposite low speed wheel end**[3)]

size **4500**

| $n_2 \cdot L_h$ | $M_2$ | $F_{r2}$ [1) 2)] | | | | | | | | | | | | | | | | $F_{a2}$ [1)] | |
|---|---|---|---|---|---|---|---|---|---|---|---|---|---|---|---|---|---|---|---|
| | | 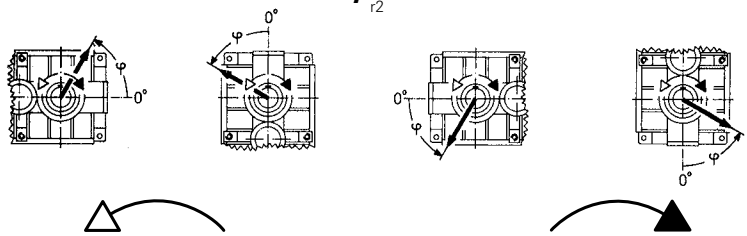 | | | | | | | | | | | | | | | | | |
| min⁻¹·h | kN m | **0** | **45** | **90** | **135** | **180** | **225** | **270** | **315** | **0** | **45** | **90** | **135** | **180** | **225** | **270** | **315** | | |
| **355 000** | 112 | 250 | 250 | 250 | 250 | 250 | 250 | 250 | 250 | 190 | 160 | 180 | 236 | 250 | 250 | 250 | 250 | 37,5 | 100 |
| | 80 | 250 | 250 | 250 | 250 | 250 | 250 | 250 | 250 | 250 | 224 | 236 | 250 | 250 | 250 | 250 | 250 | 50 | 100 |
| **450 000** | 112 | 250 | 250 | 250 | 236 | 250 | 250 | 250 | 250 | 160 | 140 | 150 | 200 | 250 | 250 | 250 | 224 | 28 | 100 |
| | 80 | 250 | 250 | 250 | 250 | 250 | 250 | 250 | 250 | 224 | 200 | 212 | 250 | 250 | 250 | 250 | 250 | 50 | 100 |
| **560 000** | 112 | 250 | 250 | 190 | 170 | 250 | 250 | 250 | 250 | 140 | 112 | 125 | 180 | 250 | 250 | 250 | 200 | 20 | 100 |
| | 80 | 250 | 250 | 250 | 250 | 250 | 250 | 250 | 250 | 200 | 180 | 190 | 236 | 250 | 250 | 250 | 250 | 45 | 100 |
| **710 000** | 112 | 250 | 224 | 112 | 100 | 150 | 250 | 236 | 250 | 112 | 90 | 100 | 150 | 236 | 250 | 250 | 180 | 12,5 | 100 |
| | 80 | 250 | 250 | 250 | 250 | 250 | 250 | 250 | 250 | 180 | 160 | 170 | 212 | 250 | 250 | 250 | 224 | 37,5 | 100 |
| **900 000** | 112 | 250 | – | – | – | – | 236 | 212 | 236 | 80 | 60 | 67 | 118 | 200 | 250 | 236 | 140 | 10 | 100 |
| | 80 | 250 | 250 | 250 | 250 | 250 | 250 | 236 | 250 | 150 | 132 | 140 | 190 | 250 | 250 | 250 | 250 | 31,5 | 100 |
| | 56 | 250 | 250 | 250 | 250 | 250 | 250 | 250 | 250 | 200 | 180 | 190 | 224 | 250 | 250 | 250 | 236 | 50 | 100 |
| **1 120 000** | 80 | 250 | 250 | 236 | 224 | 250 | 236 | 224 | 236 | 132 | 118 | 125 | 160 | 224 | 250 | 236 | 180 | 25 | 100 |
| | 56 | 250 | 250 | 250 | 250 | 250 | 250 | 236 | 250 | 180 | 160 | 170 | 200 | 236 | 250 | 250 | 212 | 45 | 100 |
| **1 400 000** | 80 | 250 | 250 | 180 | 170 | 236 | 212 | 200 | 212 | 118 | 95 | 106 | 140 | 200 | 236 | 224 | 160 | 20 | 100 |
| | 56 | 250 | 250 | 250 | 250 | 250 | 224 | 224 | 236 | 160 | 150 | 150 | 180 | 224 | 250 | 236 | 200 | 37,5 | 100 |
| **1 800 000** | 80 | 236 | 224 | 125 | 112 | 160 | 200 | 180 | 200 | 95 | 80 | 85 | 125 | 190 | 224 | 200 | 140 | 13,2 | 100 |
| | 56 | 236 | 250 | 250 | 250 | 236 | 212 | 200 | 212 | 140 | 125 | 132 | 160 | 200 | 224 | 212 | 180 | 33,5 | 95 |
| **2 240 000** | 80 | 224 | 150 | 75 | 67 | 106 | 180 | 170 | 180 | 75 | 63 | 71 | 106 | 170 | 212 | 190 | 125 | 8,5 | 95 |
| | 56 | 224 | 250 | 250 | 250 | 224 | 200 | 190 | 200 | 125 | 112 | 118 | 150 | 190 | 212 | 200 | 160 | 28 | 90 |
| **2 800 000** | 56 | 212 | 236 | 224 | 200 | 200 | 180 | 170 | 180 | 112 | 95 | 106 | 132 | 170 | 200 | 190 | 140 | 23,6 | 85 |
| | 40 | 212 | 236 | 236 | 224 | 212 | 190 | 180 | 190 | 140 | 132 | 140 | 160 | 190 | 200 | 190 | 170 | 35 | 80 |
| **3 550 000** | 56 | 190 | 224 | 170 | 160 | 190 | 170 | 160 | 170 | 95 | 80 | 90 | 118 | 160 | 180 | 170 | 132 | 18 | 80 |
| | 40 | 200 | 212 | 224 | 212 | 190 | 170 | 170 | 180 | 125 | 118 | 118 | 140 | 170 | 190 | 180 | 150 | 31,5 | 75 |
| **4 500 000** | 56 | 180 | 212 | 132 | 118 | 170 | 150 | 140 | 150 | 80 | 71 | 75 | 106 | 140 | 170 | 160 | 118 | 14 | 75 |
| | 40 | 180 | 200 | 212 | 200 | 180 | 160 | 150 | 160 | 112 | 100 | 106 | 132 | 160 | 170 | 160 | 140 | 26,5 | 71 |
| max **250** | | | | | | | | | | | | | | | | | | max **50** | max **100** |

11

size **4501**

| | | | | | | | | | | | | | | | | | | | |
|---|---|---|---|---|---|---|---|---|---|---|---|---|---|---|---|---|---|---|---|
| **355 000** | 132 | 250 | 250 | 250 | 250 | 250 | 250 | 250 | 250 | 250 | 250 | 250 | 250 | 250 | 250 | 250 | 250 | 50 | 100 |
| | 95 | 250 | 250 | 250 | 250 | 250 | 250 | 250 | 250 | 250 | 250 | 250 | 250 | 250 | 250 | 250 | 250 | 50 | 100 |
| **450 000** | 132 | 250 | 250 | 250 | 250 | 250 | 250 | 250 | 250 | 250 | 250 | 250 | 250 | 250 | 250 | 250 | 250 | 50 | 100 |
| | 95 | 250 | 250 | 250 | 250 | 250 | 250 | 250 | 250 | 250 | 250 | 250 | 250 | 250 | 250 | 250 | 250 | 50 | 100 |
| **560 000** | 132 | 250 | 250 | 250 | 250 | 250 | 250 | 250 | 250 | 250 | 250 | 250 | 250 | 250 | 250 | 250 | 250 | 50 | 100 |
| | 95 | 250 | 250 | 250 | 250 | 250 | 250 | 250 | 250 | 250 | 250 | 250 | 250 | 250 | 250 | 250 | 250 | 50 | 100 |
| **710 000** | 132 | 250 | 250 | 250 | 250 | 250 | 250 | 250 | 250 | 250 | 224 | 250 | 250 | 250 | 250 | 250 | 250 | 50 | 100 |
| | 95 | 250 | 250 | 250 | 250 | 250 | 250 | 250 | 250 | 250 | 250 | 250 | 250 | 250 | 250 | 250 | 250 | 50 | 100 |
| **900 000** | 132 | 250 | 250 | 250 | 250 | 250 | 250 | 250 | 250 | 224 | 200 | 212 | 250 | 250 | 250 | 250 | 250 | 50 | 100 |
| | 95 | 250 | 250 | 250 | 250 | 250 | 250 | 250 | 250 | 250 | 250 | 250 | 250 | 250 | 250 | 250 | 250 | 50 | 100 |
| | 67 | 250 | 250 | 250 | 250 | 250 | 250 | 250 | 250 | 250 | 250 | 250 | 250 | 250 | 250 | 250 | 250 | 50 | 100 |
| **1 120 000** | 95 | 250 | 250 | 250 | 250 | 250 | 250 | 250 | 250 | 250 | 236 | 250 | 250 | 250 | 250 | 250 | 250 | 50 | 100 |
| | 67 | 250 | 250 | 250 | 250 | 250 | 250 | 250 | 250 | 250 | 250 | 250 | 250 | 250 | 250 | 250 | 250 | 50 | 100 |
| **1 400 000** | 95 | 250 | 250 | 250 | 250 | 250 | 250 | 250 | 250 | 236 | 212 | 224 | 250 | 250 | 250 | 250 | 250 | 50 | 100 |
| | 67 | 250 | 250 | 250 | 250 | 250 | 250 | 250 | 250 | 250 | 250 | 250 | 250 | 250 | 250 | 250 | 250 | 50 | 100 |
| **1 800 000** | 95 | 250 | 250 | 250 | 250 | 250 | 250 | 250 | 250 | 212 | 180 | 190 | 250 | 250 | 250 | 250 | 250 | 50 | 100 |
| | 67 | 250 | 250 | 250 | 250 | 250 | 250 | 250 | 250 | 250 | 236 | 236 | 250 | 250 | 250 | 250 | 250 | 50 | 100 |
| **2 240 000** | 95 | 250 | 250 | 250 | 250 | 250 | 250 | 250 | 250 | 180 | 160 | 170 | 224 | 250 | 250 | 250 | 250 | 50 | 100 |
| | 67 | 250 | 250 | 250 | 250 | 250 | 250 | 250 | 250 | 224 | 212 | 224 | 250 | 250 | 250 | 250 | 250 | 50 | 100 |
| **2 800 000** | 67 | 250 | 250 | 250 | 250 | 250 | 250 | 250 | 250 | 212 | 190 | 200 | 236 | 250 | 250 | 250 | 250 | 50 | 100 |
| | 47,5 | 250 | 250 | 250 | 250 | 250 | 250 | 250 | 250 | 236 | 224 | 236 | 250 | 250 | 250 | 250 | 250 | 50 | 100 |
| **3 550 000** | 67 | 250 | 250 | 250 | 250 | 250 | 250 | 236 | 250 | 190 | 170 | 180 | 212 | 250 | 250 | 250 | 236 | 50 | 100 |
| | 47,5 | 250 | 250 | 250 | 250 | 250 | 250 | 250 | 250 | 212 | 200 | 212 | 236 | 250 | 250 | 250 | 250 | 50 | 100 |
| **4 500 000** | 67 | 250 | 250 | 250 | 250 | 250 | 236 | 224 | 236 | 170 | 150 | 160 | 190 | 250 | 250 | 250 | 212 | 50 | 100 |
| | 47,5 | 250 | 250 | 250 | 250 | 250 | 236 | 236 | 250 | 200 | 180 | 190 | 212 | 250 | 250 | 250 | 224 | 50 | 100 |
| max **250** | | | | | | | | | | | | | | | | | | max **50** | max **100** |

1) An axial load of up to 0,2 times the value in the table is permissible, simultaneously with the radial load. If exceeded consult us.
2) An unfavorable direction of load can limit $F_{r2}$ to $0{,}71 \cdot F_{r2max}$
3) For radial loads acting simultaneously on both sides of double extension low speed shaft or for hollow low speed shaft, consult us.

2586-01.02

## 11.2 - Axial loads $F_{a2}$ [kN] or radial loads $F_{r2}$ [kN] on low speed shaft end

Radial load on **low speed wheel end**[3)]

size **4500**

| $n_2 \cdot L_h$ | $M_2$ | $F_{r2}$ [1) 2)] | | | | | | | | | | | | | | | | $F_{a2}$ [1)] | |
|---|---|---|---|---|---|---|---|---|---|---|---|---|---|---|---|---|---|---|---|
| | | 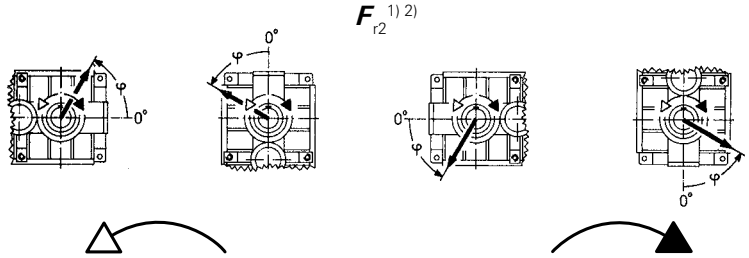 | | | | | | | | | | | | | | | | | |
| min⁻¹·h | kN m | **0** | **45** | **90** | **135** | **180** | **225** | **270** | **315** | **0** | **45** | **90** | **135** | **180** | **225** | **270** | **315** | | |
| **355 000** | 112 | 250 | 250 | 250 | 250 | 250 | 250 | 250 | 250 | 140 | 106 | 118 | 180 | 250 | 250 | 250 | 250 | 37,5 | 100 |
| | 80 | 250 | 250 | 250 | 250 | 250 | 250 | 250 | 250 | 224 | 190 | 200 | 250 | 250 | 250 | 250 | 250 | 50 | 100 |
| **450 000** | 112 | 250 | 250 | 250 | 250 | 250 | 250 | 224 | 250 | 112 | 80 | 90 | 140 | 250 | 250 | 250 | 224 | 28 | 100 |
| | 80 | 250 | 250 | 250 | 250 | 250 | 250 | 250 | 250 | 200 | 160 | 170 | 224 | 250 | 250 | 250 | 250 | 50 | 100 |
| **560 000** | 112 | 250 | 250 | 250 | 250 | 250 | 236 | 200 | 224 | 85 | 56 | 63 | 112 | 250 | 250 | 250 | 190 | 20 | 100 |
| | 80 | 250 | 250 | 250 | 250 | 250 | 250 | 250 | 250 | 170 | 140 | 150 | 200 | 250 | 250 | 250 | 250 | 45 | 100 |
| **710 000** | 112 | 250 | 250 | 250 | 250 | 250 | 212 | 180 | 200 | 53 | – | – | 75 | 224 | 250 | 250 | 150 | 12,5 | 100 |
| | 80 | 250 | 250 | 250 | 250 | 250 | 250 | 224 | 236 | 150 | 118 | 125 | 170 | 250 | 250 | 250 | 224 | 37,5 | 100 |
| **900 000** | 112 | 250 | 250 | 250 | 180 | 224 | 190 | 160 | 180 | – | – | – | – | 170 | 250 | 250 | 85 | 10 | 100 |
| | 80 | 250 | 250 | 250 | 250 | 250 | 224 | 200 | 212 | 125 | 95 | 100 | 150 | 236 | 250 | 250 | 200 | 31,5 | 100 |
| | 56 | 250 | 250 | 250 | 250 | 250 | 250 | 224 | 236 | 180 | 150 | 160 | 200 | 250 | 250 | 250 | 236 | 50 | 100 |
| **1 120 000** | 80 | 250 | 250 | 250 | 250 | 250 | 212 | 180 | 190 | 100 | 75 | 80 | 125 | 224 | 250 | 250 | 180 | 25 | 100 |
| | 56 | 250 | 250 | 250 | 250 | 250 | 236 | 212 | 226 | 160 | 140 | 140 | 180 | 250 | 250 | 250 | 224 | 45 | 100 |
| **1 400 000** | 80 | 224 | 250 | 250 | 250 | 250 | 190 | 160 | 180 | 80 | 56 | 63 | 100 | 200 | 250 | 250 | 150 | 20 | 100 |
| | 56 | 236 | 250 | 250 | 250 | 250 | 212 | 190 | 200 | 140 | 118 | 125 | 160 | 224 | 250 | 250 | 200 | 37,5 | 100 |
| **1 800 000** | 80 | 212 | 250 | 250 | 236 | 236 | 170 | 140 | 160 | 56 | – | 42,5 | 75 | 180 | 250 | 236 | 132 | 13,2 | 100 |
| | 56 | 224 | 250 | 250 | 250 | 236 | 190 | 170 | 180 | 125 | 100 | 106 | 140 | 212 | 250 | 236 | 180 | 33,5 | 95 |
| **2 240 000** | 80 | 190 | 250 | 212 | 190 | 212 | 150 | 132 | 140 | – | – | – | 53 | 150 | 250 | 224 | 106 | 8,5 | 95 |
| | 56 | 212 | 250 | 250 | 250 | 224 | 180 | 160 | 170 | 106 | 85 | 90 | 125 | 190 | 236 | 224 | 160 | 28 | 90 |
| **2 800 000** | 56 | 190 | 250 | 250 | 250 | 212 | 160 | 140 | 150 | 90 | 71 | 75 | 106 | 170 | 224 | 212 | 140 | 23,6 | 85 |
| | 40 | 200 | 236 | 250 | 250 | 212 | 180 | 160 | 170 | 132 | 112 | 118 | 140 | 190 | 224 | 212 | 170 | 35 | 80 |
| **3 550 000** | 56 | 180 | 236 | 250 | 250 | 190 | 150 | 132 | 140 | 75 | 56 | 60 | 90 | 160 | 212 | 200 | 125 | 18 | 80 |
| | 40 | 180 | 224 | 250 | 236 | 200 | 160 | 150 | 160 | 112 | 95 | 100 | 132 | 170 | 212 | 200 | 150 | 31,5 | 75 |
| **4 500 000** | 56 | 160 | 212 | 224 | 200 | 180 | 132 | 118 | 125 | 56 | 40 | 45 | 75 | 140 | 200 | 180 | 112 | 14 | 75 |
| | 40 | 170 | 212 | 236 | 224 | 180 | 150 | 132 | 140 | 100 | 80 | 85 | 112 | 160 | 190 | 180 | 140 | 26,5 | 71 |
| | | max **250** | | | | | | | | | | | | | | | | max **50** | max **100** |

size **4501**

| | | | | | | | | | | | | | | | | | | | |
|---|---|---|---|---|---|---|---|---|---|---|---|---|---|---|---|---|---|---|---|
| **355 000** | 132 | 250 | 250 | 250 | 250 | 250 | 250 | 250 | 250 | 250 | 250 | 250 | 250 | 250 | 250 | 250 | 250 | 50 | 100 |
| | 95 | 250 | 250 | 250 | 250 | 250 | 250 | 250 | 250 | 250 | 250 | 250 | 250 | 250 | 250 | 250 | 250 | 50 | 100 |
| **450 000** | 132 | 250 | 250 | 250 | 250 | 250 | 250 | 250 | 250 | 250 | 236 | 250 | 250 | 250 | 250 | 250 | 250 | 50 | 100 |
| | 95 | 250 | 250 | 250 | 250 | 250 | 250 | 250 | 250 | 250 | 250 | 250 | 250 | 250 | 250 | 250 | 250 | 50 | 100 |
| **560 000** | 132 | 250 | 250 | 250 | 250 | 250 | 250 | 250 | 250 | 250 | 200 | 212 | 250 | 250 | 250 | 250 | 250 | 50 | 100 |
| | 95 | 250 | 250 | 250 | 250 | 250 | 250 | 250 | 250 | 250 | 250 | 250 | 250 | 250 | 250 | 250 | 250 | 50 | 100 |
| **710 000** | 132 | 250 | 250 | 250 | 250 | 250 | 250 | 250 | 250 | 212 | 160 | 180 | 250 | 250 | 250 | 250 | 250 | 50 | 100 |
| | 95 | 250 | 250 | 250 | 250 | 250 | 250 | 250 | 250 | 250 | 250 | 250 | 250 | 250 | 250 | 250 | 250 | 50 | 100 |
| **900 000** | 132 | 250 | 250 | 250 | 250 | 250 | 250 | 250 | 250 | 180 | 132 | 140 | 212 | 250 | 250 | 250 | 250 | 50 | 100 |
| | 95 | 250 | 250 | 250 | 250 | 250 | 250 | 250 | 250 | 250 | 212 | 224 | 250 | 250 | 250 | 250 | 250 | 50 | 100 |
| | 67 | 250 | 250 | 250 | 250 | 250 | 250 | 250 | 250 | 250 | 250 | 250 | 250 | 250 | 250 | 250 | 250 | 50 | 100 |
| **1 120 000** | 95 | 250 | 250 | 250 | 250 | 250 | 250 | 250 | 250 | 236 | 190 | 200 | 250 | 250 | 250 | 250 | 250 | 50 | 100 |
| | 67 | 250 | 250 | 250 | 250 | 250 | 250 | 250 | 250 | 250 | 250 | 250 | 250 | 250 | 250 | 250 | 250 | 50 | 100 |
| **1 400 000** | 95 | 250 | 250 | 250 | 250 | 250 | 250 | 250 | 250 | 200 | 160 | 170 | 236 | 250 | 250 | 250 | 250 | 50 | 100 |
| | 67 | 250 | 250 | 250 | 250 | 250 | 250 | 250 | 250 | 250 | 224 | 236 | 250 | 250 | 250 | 250 | 250 | 50 | 100 |
| **1 800 000** | 95 | 250 | 250 | 250 | 250 | 250 | 250 | 236 | 250 | 170 | 132 | 140 | 200 | 250 | 250 | 250 | 250 | 50 | 100 |
| | 67 | 250 | 250 | 250 | 250 | 250 | 250 | 250 | 250 | 236 | 200 | 212 | 250 | 250 | 250 | 250 | 250 | 50 | 100 |
| **2 240 000** | 95 | 250 | 250 | 250 | 250 | 250 | 250 | 212 | 236 | 150 | 112 | 118 | 180 | 250 | 250 | 250 | 236 | 47,5 | 100 |
| | 67 | 250 | 250 | 250 | 250 | 250 | 250 | 250 | 250 | 212 | 180 | 190 | 236 | 250 | 250 | 250 | 250 | 50 | 100 |
| **2 800 000** | 67 | 250 | 250 | 250 | 250 | 250 | 250 | 224 | 236 | 190 | 160 | 160 | 212 | 250 | 250 | 250 | 250 | 50 | 100 |
| | 47,5 | 250 | 250 | 250 | 250 | 250 | 250 | 250 | 250 | 224 | 200 | 212 | 250 | 250 | 250 | 250 | 250 | 50 | 100 |
| **3 550 000** | 67 | 250 | 250 | 250 | 250 | 250 | 236 | 212 | 224 | 160 | 132 | 140 | 190 | 250 | 250 | 250 | 236 | 50 | 100 |
| | 47,5 | 250 | 250 | 250 | 250 | 250 | 250 | 236 | 236 | 200 | 180 | 190 | 224 | 250 | 250 | 250 | 250 | 50 | 100 |
| **4 500 000** | 67 | 250 | 250 | 250 | 250 | 250 | 212 | 190 | 200 | 140 | 112 | 125 | 170 | 250 | 250 | 250 | 212 | 47,5 | 100 |
| | 47,5 | 250 | 250 | 250 | 250 | 250 | 224 | 212 | 224 | 180 | 160 | 170 | 200 | 250 | 250 | 250 | 236 | 50 | 100 |
| | | max **250** | | | | | | | | | | | | | | | | max **50** | max **100** |

1) An axial load of up to 0,2 times the value in the table is permissible, simultaneously with the radial load. If exceeded consult us.
2) An unfavorable direction of load can limit $F_{r2}$ to 0,71 · $F_{r2max}$
3) For radial loads acting simultaneously on both sides of double extension low speed shaft or for hollow low speed shaft, consult us.

## 11.2 - Axial loads $F_{a2}$ [kN] or radial loads $F_{r2}$ [kN] on low speed shaft end

Radial load on **opposite low speed wheel end**[3)]

size **5000**

| $n_2 \cdot L_h$ | $M_2$ | $F_{r2}$ [1) 2)] | | | | | | | | | | | | | | | | $F_{a2}$ [1)] | |
|---|---|---|---|---|---|---|---|---|---|---|---|---|---|---|---|---|---|---|---|
| min⁻¹·h | kN m | 0 | 45 | 90 | 135 | 180 | 225 | 270 | 315 | 0 | 45 | 90 | 135 | 180 | 225 | 270 | 315 | | |
| **355 000** | 160 | 315 | 315 | 315 | 315 | 315 | 315 | 315 | 315 | 250 | 212 | 236 | 300 | 315 | 315 | 315 | 315 | 42,5 | 125 |
| | 112 | 315 | 315 | 315 | 315 | 315 | 315 | 315 | 315 | 315 | 300 | 315 | 315 | 315 | 315 | 315 | 315 | 63 | 125 |
| **450 000** | 160 | 315 | 315 | 280 | 265 | 315 | 315 | 315 | 315 | 212 | 180 | 200 | 265 | 315 | 315 | 315 | 280 | 31,5 | 125 |
| | 112 | 315 | 315 | 315 | 315 | 315 | 315 | 315 | 315 | 280 | 265 | 280 | 315 | 315 | 315 | 315 | 315 | 63 | 125 |
| **560 000** | 160 | 315 | 315 | 190 | 180 | 265 | 315 | 315 | 315 | 180 | 150 | 170 | 236 | 315 | 315 | 315 | 250 | 21,2 | 125 |
| | 112 | 315 | 315 | 315 | 315 | 315 | 315 | 315 | 315 | 265 | 236 | 250 | 300 | 315 | 315 | 315 | 315 | 56 | 125 |
| **710 000** | 160 | 315 | 212 | 90 | 80 | 140 | 315 | 315 | 315 | 150 | 125 | 140 | 200 | 300 | 315 | 315 | 224 | 15 | 125 |
| | 112 | 315 | 315 | 315 | 315 | 315 | 315 | 315 | 315 | 236 | 212 | 224 | 265 | 315 | 315 | 315 | 280 | 47,5 | 125 |
| **900 000** | 160 | – | – | – | – | – | – | – | – | 100 | 80 | 90 | 150 | 250 | 315 | 280 | 170 | 17 | 125 |
| | 112 | 315 | 315 | 315 | 315 | 315 | 315 | 315 | 315 | 200 | 180 | 190 | 236 | 315 | 315 | 315 | 265 | 37,5 | 125 |
| | 80 | 315 | 315 | 315 | 315 | 315 | 315 | 315 | 315 | 250 | 236 | 250 | 280 | 315 | 315 | 315 | 300 | 63 | 125 |
| **1 120 000** | 112 | 315 | 315 | 300 | 280 | 315 | 300 | 280 | 315 | 180 | 150 | 170 | 212 | 280 | 315 | 300 | 236 | 30 | 125 |
| | 80 | 315 | 315 | 315 | 315 | 315 | 315 | 315 | 315 | 236 | 212 | 224 | 265 | 300 | 315 | 315 | 265 | 53 | 125 |
| **1 400 000** | 112 | 315 | 315 | 224 | 200 | 280 | 280 | 265 | 280 | 150 | 132 | 140 | 190 | 265 | 300 | 280 | 212 | 23,6 | 125 |
| | 80 | 315 | 315 | 315 | 315 | 315 | 300 | 280 | 300 | 212 | 190 | 200 | 236 | 280 | 315 | 300 | 250 | 47,5 | 125 |
| **1 800 000** | 112 | 300 | 265 | 140 | 132 | 200 | 250 | 236 | 265 | 125 | 106 | 118 | 160 | 236 | 280 | 250 | 180 | 15 | 125 |
| | 80 | 315 | 315 | 315 | 315 | 300 | 265 | 265 | 280 | 180 | 160 | 180 | 212 | 265 | 280 | 265 | 224 | 37,5 | 118 |
| **2 240 000** | 112 | 280 | 170 | 75 | 67 | 112 | 236 | 224 | 236 | 106 | 90 | 100 | 140 | 212 | 250 | 236 | 160 | 9,5 | 118 |
| | 80 | 280 | 315 | 315 | 300 | 280 | 250 | 236 | 250 | 160 | 140 | 160 | 190 | 236 | 265 | 250 | 200 | 33,5 | 112 |
| **2 800 000** | 80 | 265 | 300 | 265 | 250 | 265 | 236 | 224 | 236 | 140 | 125 | 140 | 170 | 224 | 250 | 236 | 180 | 26,5 | 106 |
| | 56 | 265 | 300 | 300 | 280 | 265 | 236 | 236 | 250 | 180 | 170 | 180 | 200 | 236 | 250 | 236 | 212 | 45 | 100 |
| **3 550 000** | 80 | 250 | 280 | 200 | 190 | 236 | 212 | 200 | 212 | 125 | 106 | 118 | 150 | 200 | 224 | 212 | 160 | 21,2 | 100 |
| | 56 | 250 | 280 | 280 | 265 | 250 | 224 | 212 | 224 | 160 | 150 | 160 | 180 | 212 | 236 | 224 | 190 | 37,5 | 90 |
| **4 500 000** | 80 | 236 | 250 | 150 | 132 | 200 | 200 | 190 | 200 | 106 | 90 | 100 | 132 | 180 | 212 | 190 | 140 | 15 | 90 |
| | 56 | 236 | 250 | 265 | 250 | 224 | 212 | 200 | 212 | 150 | 132 | 140 | 170 | 200 | 224 | 212 | 180 | 33,5 | 85 |
| | | max **315** | | | | | | | | | | | | | | | | max **63** | max **125** |

**11**

size **5001**

| | | | | | | | | | | | | | | | | | | | |
|---|---|---|---|---|---|---|---|---|---|---|---|---|---|---|---|---|---|---|---|
| **355 000** | 190 | 315 | 315 | 315 | 315 | 315 | 315 | 315 | 315 | 315 | 315 | 315 | 315 | 315 | 315 | 315 | 315 | 63 | 125 |
| | 132 | 315 | 315 | 315 | 315 | 315 | 315 | 315 | 315 | 315 | 315 | 315 | 315 | 315 | 315 | 315 | 315 | 63 | 125 |
| **450 000** | 190 | 315 | 315 | 315 | 315 | 315 | 315 | 315 | 315 | 300 | 265 | 280 | 315 | 315 | 315 | 315 | 315 | 63 | 125 |
| | 132 | 315 | 315 | 315 | 315 | 315 | 315 | 315 | 315 | 315 | 315 | 315 | 315 | 315 | 315 | 315 | 315 | 63 | 125 |
| **560 000** | 190 | 315 | 315 | 315 | 315 | 315 | 315 | 315 | 315 | 265 | 224 | 250 | 315 | 315 | 315 | 315 | 315 | 53 | 125 |
| | 132 | 315 | 315 | 315 | 315 | 315 | 315 | 315 | 315 | 315 | 315 | 315 | 315 | 315 | 315 | 315 | 315 | 63 | 125 |
| **710 000** | 190 | 315 | 315 | 280 | 265 | 315 | 315 | 315 | 315 | 224 | 190 | 212 | 280 | 315 | 315 | 315 | 315 | 40 | 125 |
| | 132 | 315 | 315 | 315 | 315 | 315 | 315 | 315 | 315 | 315 | 280 | 300 | 315 | 315 | 315 | 315 | 315 | 63 | 125 |
| **900 000** | 190 | 315 | 315 | 170 | 150 | 250 | 315 | 315 | 315 | 190 | 160 | 170 | 250 | 315 | 315 | 315 | 280 | 28 | 125 |
| | 132 | 315 | 315 | 315 | 315 | 315 | 315 | 315 | 315 | 280 | 250 | 265 | 315 | 315 | 315 | 315 | 315 | 63 | 125 |
| | 95 | 315 | 315 | 315 | 315 | 315 | 315 | 315 | 315 | 315 | 315 | 315 | 315 | 315 | 315 | 315 | 315 | 63 | 125 |
| **1 120 000** | 132 | 315 | 315 | 315 | 315 | 315 | 315 | 315 | 315 | 250 | 224 | 236 | 300 | 315 | 315 | 315 | 315 | 60 | 125 |
| | 95 | 315 | 315 | 315 | 315 | 315 | 315 | 315 | 315 | 300 | 280 | 300 | 315 | 315 | 315 | 315 | 315 | 63 | 125 |
| **1 400 000** | 132 | 315 | 315 | 315 | 315 | 315 | 315 | 315 | 315 | 224 | 190 | 212 | 265 | 315 | 315 | 315 | 300 | 50 | 125 |
| | 95 | 315 | 315 | 315 | 315 | 315 | 315 | 315 | 315 | 280 | 250 | 265 | 315 | 315 | 315 | 315 | 315 | 63 | 125 |
| **1 800 000** | 132 | 315 | 315 | 300 | 280 | 315 | 315 | 300 | 315 | 190 | 160 | 180 | 236 | 315 | 315 | 315 | 265 | 37,5 | 125 |
| | 95 | 315 | 315 | 315 | 315 | 315 | 315 | 315 | 315 | 250 | 224 | 236 | 280 | 315 | 315 | 315 | 300 | 63 | 125 |
| **2 240 000** | 132 | 315 | 315 | 224 | 212 | 315 | 280 | 265 | 300 | 170 | 140 | 150 | 212 | 300 | 315 | 315 | 236 | 30 | 125 |
| | 95 | 315 | 315 | 315 | 315 | 315 | 315 | 300 | 315 | 224 | 200 | 212 | 250 | 315 | 315 | 315 | 280 | 56 | 125 |
| **2 800 000** | 95 | 315 | 315 | 315 | 315 | 315 | 280 | 265 | 280 | 200 | 180 | 190 | 224 | 280 | 315 | 300 | 250 | 47,5 | 125 |
| | 67 | 315 | 315 | 315 | 315 | 315 | 300 | 280 | 300 | 236 | 224 | 236 | 265 | 300 | 315 | 315 | 280 | 63 | 125 |
| **3 550 000** | 95 | 300 | 315 | 315 | 315 | 300 | 265 | 250 | 265 | 180 | 150 | 160 | 200 | 265 | 300 | 280 | 224 | 40 | 125 |
| | 67 | 300 | 315 | 315 | 315 | 300 | 280 | 265 | 280 | 212 | 200 | 212 | 236 | 280 | 300 | 280 | 250 | 60 | 118 |
| **4 500 000** | 95 | 280 | 315 | 265 | 250 | 280 | 236 | 224 | 236 | 150 | 132 | 140 | 180 | 236 | 280 | 265 | 200 | 33,5 | 118 |
| | 67 | 280 | 315 | 315 | 315 | 280 | 250 | 250 | 250 | 190 | 180 | 190 | 212 | 265 | 280 | 265 | 236 | 53 | 112 |
| | | max **315** | | | | | | | | | | | | | | | | max **63** | max **125** |

1) An axial load of up to 0,2 times the value in the table is permissible, simultaneously with the radial load. If exceeded consult us.
2) An unfavorable direction of load can limit $F_{r2}$ to $0,9 \cdot F_{r2max}$.
3) For radial loads acting simultaneously on both sides of double extension low speed shaft or for hollow low speed shaft, consult us.

2586-01.02

## 11.2 - Axial loads $F_{a2}$ [kN] or radial loads $F_{r2}$ [kN] on low speed shaft end

Radial load on **low speed wheel end**[3)]

size **5000**

| $n_2 \cdot L_h$ | $M_2$ | $F_{r2}$ [1) 2)] | | | | | | | | | | | | | | | | $F_{a2}$ [1)] | |
|---|---|---|---|---|---|---|---|---|---|---|---|---|---|---|---|---|---|---|---|
| | | 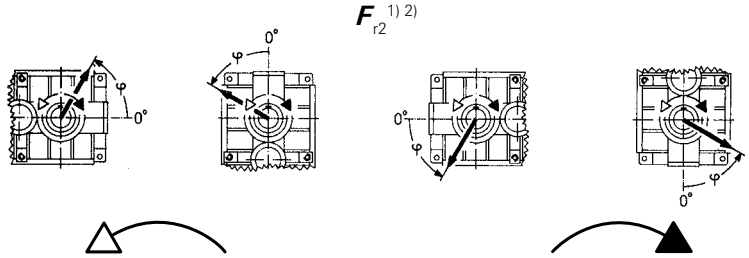 | | | | | | | | | | | | | | | | | |
| min⁻¹·h | kN m | **0** | **45** | **90** | **135** | **180** | **225** | **270** | **315** | **0** | **45** | **90** | **135** | **180** | **225** | **270** | **315** | | |
| **355 000** | 160 | 315 | 315 | 315 | 315 | 315 | 315 | 315 | 315 | 170 | 125 | 132 | 212 | 315 | 315 | 315 | 315 | 42,5 | 125 |
| | 112 | 315 | 315 | 315 | 315 | 315 | 315 | 315 | 315 | 280 | 236 | 250 | 315 | 315 | 315 | 315 | 315 | 63 | 125 |
| **450 000** | 160 | 315 | 315 | 315 | 315 | 315 | 315 | 280 | 300 | 125 | 90 | 95 | 165 | 315 | 315 | 315 | 265 | 31,5 | 125 |
| | 112 | 315 | 315 | 315 | 315 | 315 | 315 | 315 | 315 | 250 | 200 | 212 | 280 | 315 | 315 | 315 | 315 | 63 | 125 |
| **560 000** | 160 | 315 | 315 | 315 | 315 | 315 | 300 | 250 | 265 | 90 | 56 | 63 | 125 | 315 | 315 | 315 | 224 | 21,2 | 125 |
| | 112 | 315 | 315 | 315 | 315 | 315 | 315 | 300 | 315 | 212 | 170 | 180 | 250 | 315 | 315 | 315 | 315 | 56 | 125 |
| **710 000** | 160 | 315 | 315 | 315 | 315 | 315 | 265 | 224 | 236 | – | – | – | 71 | 265 | 315 | 315 | 170 | 15 | 125 |
| | 112 | 315 | 315 | 315 | 315 | 315 | 315 | 280 | 300 | 180 | 140 | 150 | 212 | 315 | 315 | 315 | 280 | 47,5 | 125 |
| **900 000** | 160 | 300 | 315 | 280 | 250 | 315 | 236 | 190 | 212 | – | – | – | – | – | – | – | – | – | 125 |
| | 112 | 315 | 315 | 315 | 315 | 315 | 280 | 250 | 265 | 150 | 118 | 125 | 180 | 315 | 315 | 315 | 250 | 37,5 | 125 |
| | 80 | 315 | 315 | 315 | 315 | 315 | 315 | 280 | 300 | 224 | 190 | 200 | 250 | 315 | 315 | 315 | 300 | 63 | 125 |
| **1 120 000** | 112 | 315 | 315 | 315 | 315 | 315 | 265 | 224 | 236 | 125 | 90 | 95 | 150 | 280 | 315 | 315 | 224 | 30 | 125 |
| | 80 | 315 | 315 | 315 | 315 | 315 | 280 | 265 | 280 | 200 | 170 | 170 | 224 | 315 | 315 | 315 | 280 | 53 | 125 |
| **1 400 000** | 112 | 280 | 315 | 315 | 315 | 315 | 236 | 200 | 212 | 95 | 67 | 71 | 125 | 250 | 315 | 315 | 200 | 23,6 | 125 |
| | 80 | 300 | 315 | 315 | 315 | 315 | 265 | 236 | 250 | 180 | 140 | 150 | 200 | 280 | 315 | 315 | 250 | 47,5 | 125 |
| **1 800 000** | 112 | 265 | 315 | 315 | 315 | 300 | 212 | 180 | 190 | 63 | – | – | 90 | 224 | 315 | 300 | 160 | 15 | 125 |
| | 80 | 280 | 315 | 315 | 315 | 300 | 236 | 212 | 224 | 150 | 118 | 125 | 170 | 265 | 315 | 315 | 224 | 37,5 | 118 |
| **2 240 000** | 112 | 236 | 315 | 300 | 265 | 280 | 190 | 160 | 170 | – | – | – | 56 | 190 | 315 | 280 | 132 | 9,5 | 118 |
| | 80 | 265 | 315 | 315 | 315 | 280 | 224 | 200 | 212 | 132 | 100 | 106 | 150 | 236 | 315 | 280 | 200 | 33,5 | 112 |
| **2 800 000** | 80 | 236 | 315 | 315 | 315 | 265 | 200 | 180 | 190 | 106 | 80 | 85 | 132 | 224 | 280 | 265 | 180 | 26,5 | 106 |
| | 56 | 250 | 300 | 315 | 315 | 265 | 224 | 200 | 212 | 160 | 140 | 140 | 180 | 236 | 280 | 280 | 212 | 45 | 100 |
| **3 550 000** | 80 | 224 | 300 | 315 | 315 | 250 | 180 | 160 | 170 | 85 | 63 | 67 | 106 | 200 | 265 | 250 | 160 | 21,2 | 100 |
| | 56 | 236 | 280 | 315 | 300 | 250 | 200 | 190 | 200 | 140 | 118 | 125 | 160 | 224 | 265 | 250 | 200 | 37,5 | 90 |
| **4 500 000** | 80 | 200 | 280 | 300 | 280 | 224 | 160 | 140 | 150 | 63 | – | – | 85 | 180 | 250 | 236 | 140 | 15 | 90 |
| | 56 | 212 | 265 | 300 | 280 | 236 | 190 | 170 | 180 | 125 | 100 | 106 | 140 | 200 | 250 | 236 | 180 | 33,5 | 85 |
| max **315** | | | | | | | | | | | | | | | | | | max **63** | max **125** |

size **5001**

| | | | | | | | | | | | | | | | | | | | |
|---|---|---|---|---|---|---|---|---|---|---|---|---|---|---|---|---|---|---|---|
| **355 000** | 190 | 315 | 315 | 315 | 315 | 315 | 315 | 315 | 315 | 265 | 200 | 212 | 315 | 315 | 315 | 315 | 315 | 63 | 125 |
| | 132 | 315 | 315 | 315 | 315 | 315 | 315 | 315 | 315 | 315 | 315 | 315 | 315 | 315 | 315 | 315 | 315 | 63 | 125 |
| **450 000** | 190 | 315 | 315 | 315 | 315 | 315 | 315 | 315 | 315 | 212 | 160 | 170 | 265 | 315 | 315 | 315 | 315 | 56 | 125 |
| | 132 | 315 | 315 | 315 | 315 | 315 | 315 | 315 | 315 | 315 | 280 | 300 | 315 | 315 | 315 | 315 | 315 | 63 | 125 |
| **560 000** | 190 | 315 | 315 | 315 | 315 | 315 | 315 | 315 | 315 | 170 | 118 | 132 | 212 | 315 | 315 | 315 | 315 | 45 | 125 |
| | 132 | 315 | 315 | 315 | 315 | 315 | 315 | 315 | 315 | 300 | 250 | 265 | 315 | 315 | 315 | 315 | 315 | 63 | 125 |
| **710 000** | 190 | 315 | 315 | 315 | 315 | 315 | 315 | 265 | 300 | 125 | 85 | 90 | 160 | 315 | 315 | 315 | 300 | 31,5 | 125 |
| | 132 | 315 | 315 | 315 | 315 | 315 | 315 | 315 | 315 | 265 | 212 | 224 | 300 | 315 | 315 | 315 | 315 | 63 | 125 |
| **900 000** | 190 | 315 | 315 | 315 | 315 | 315 | 300 | 236 | 265 | 80 | 47,5 | 53 | 106 | 315 | 315 | 315 | 236 | 20 | 125 |
| | 132 | 315 | 315 | 315 | 315 | 315 | 315 | 300 | 315 | 224 | 180 | 190 | 265 | 315 | 315 | 315 | 315 | 63 | 125 |
| | 95 | 315 | 315 | 315 | 315 | 315 | 315 | 315 | 315 | 300 | 265 | 265 | 315 | 315 | 315 | 315 | 315 | 63 | 125 |
| **1 120 000** | 132 | 315 | 315 | 315 | 315 | 315 | 315 | 280 | 300 | 190 | 150 | 160 | 224 | 315 | 315 | 315 | 315 | 53 | 125 |
| | 95 | 315 | 315 | 315 | 315 | 315 | 315 | 315 | 315 | 265 | 224 | 236 | 300 | 315 | 315 | 315 | 315 | 63 | 125 |
| **1 400 000** | 132 | 315 | 315 | 315 | 315 | 315 | 300 | 250 | 265 | 160 | 118 | 125 | 190 | 315 | 315 | 315 | 280 | 42,5 | 125 |
| | 95 | 315 | 315 | 315 | 315 | 315 | 315 | 300 | 315 | 236 | 200 | 212 | 265 | 315 | 315 | 315 | 315 | 63 | 125 |
| **1 800 000** | 132 | 315 | 315 | 315 | 315 | 315 | 265 | 224 | 236 | 125 | 90 | 95 | 160 | 300 | 315 | 315 | 250 | 33,5 | 125 |
| | 95 | 315 | 315 | 315 | 315 | 315 | 300 | 265 | 280 | 212 | 170 | 180 | 236 | 315 | 315 | 315 | 300 | 60 | 125 |
| **2 240 000** | 132 | 280 | 315 | 315 | 315 | 315 | 236 | 200 | 212 | 95 | 63 | 71 | 125 | 280 | 315 | 315 | 212 | 25 | 125 |
| | 95 | 315 | 315 | 315 | 315 | 315 | 280 | 236 | 250 | 180 | 150 | 150 | 212 | 315 | 315 | 315 | 280 | 53 | 125 |
| **2 800 000** | 95 | 300 | 315 | 315 | 315 | 315 | 250 | 212 | 224 | 160 | 125 | 132 | 180 | 280 | 315 | 315 | 250 | 45 | 125 |
| | 67 | 300 | 315 | 315 | 315 | 315 | 280 | 250 | 265 | 212 | 180 | 190 | 236 | 315 | 315 | 315 | 280 | 63 | 125 |
| **3 550 000** | 95 | 265 | 315 | 315 | 315 | 300 | 224 | 190 | 212 | 132 | 100 | 106 | 160 | 265 | 315 | 315 | 224 | 37,5 | 118 |
| | 67 | 280 | 315 | 315 | 315 | 315 | 250 | 224 | 236 | 190 | 160 | 170 | 212 | 300 | 315 | 315 | 265 | 60 | 118 |
| **4 500 000** | 95 | 250 | 315 | 315 | 315 | 280 | 200 | 170 | 190 | 106 | 80 | 85 | 140 | 236 | 315 | 315 | 200 | 30 | 112 |
| | 67 | 265 | 315 | 315 | 315 | 280 | 236 | 212 | 212 | 170 | 140 | 150 | 190 | 265 | 315 | 300 | 236 | 50 | 112 |
| max **315** | | | | | | | | | | | | | | | | | | max **63** | max **125** |

1) An axial load of up to 0,2 times the value in the table is permissible, simultaneously with the radial load. If exceeded consult us.
2) An unfavorable direction of load can limit $F_{r2}$ to $0,9 \cdot F_{r2max}$.
3) For radial loads acting simultaneously on both sides of double extension low speed shaft or for hollow low speed shaft, consult us.

## 11.2 - Axial loads $F_{a2}$ [kN] or radial loads $F_{r2}$ [kN] on low speed shaft end

Radial load on **opposite low speed wheel end**[3)]

size **5600**

| $n_2 \cdot L_h$ | $M_2$ | $F_{r2}$ [1) 2)] | | | | | | | | | | | | | | | | $F_{a2}$ [1)] | |
|---|---|---|---|---|---|---|---|---|---|---|---|---|---|---|---|---|---|---|---|
| min⁻¹·h | kN m | 0 | 45 | 90 | 135 | 180 | 225 | 270 | 315 | 0 | 45 | 90 | 135 | 180 | 225 | 270 | 315 | | |
| **355 000** | 224 | 400 | 400 | 400 | 400 | 400 | 400 | 400 | 400 | 280 | 236 | 265 | 355 | 400 | 400 | 400 | 375 | 47,5 | 160 |
| | 160 | 400 | 400 | 400 | 400 | 400 | 400 | 400 | 400 | 375 | 355 | 375 | 400 | 400 | 400 | 400 | 400 | 80 | 160 |
| **450 000** | 224 | 400 | 400 | 355 | 335 | 400 | 400 | 400 | 400 | 236 | 200 | 224 | 300 | 400 | 400 | 400 | 335 | 35,5 | 160 |
| | 160 | 400 | 400 | 400 | 400 | 400 | 400 | 400 | 400 | 335 | 300 | 315 | 400 | 400 | 400 | 400 | 400 | 75 | 160 |
| **560 000** | 224 | 400 | 400 | 250 | 224 | 335 | 400 | 400 | 400 | 200 | 160 | 180 | 265 | 400 | 400 | 400 | 300 | 23,6 | 160 |
| | 160 | 400 | 400 | 400 | 400 | 400 | 400 | 400 | 400 | 300 | 265 | 280 | 355 | 400 | 400 | 400 | 375 | 63 | 160 |
| **710 000** | 224 | 400 | 200 | 80 | 71 | 118 | 400 | 375 | 400 | 140 | 112 | 132 | 200 | 355 | 400 | 375 | 250 | 17 | 160 |
| | 160 | 400 | 400 | 400 | 400 | 400 | 400 | 400 | 400 | 265 | 236 | 250 | 315 | 400 | 400 | 400 | 335 | 53 | 160 |
| **900 000** | 224 | – | – | – | – | – | – | – | – | 85 | 63 | 75 | 140 | 280 | 375 | 335 | 180 | – | 160 |
| | 160 | 400 | 400 | 400 | 400 | 400 | 400 | 375 | 400 | 224 | 200 | 212 | 280 | 375 | 400 | 400 | 300 | 42,5 | 160 |
| | 112 | 400 | 400 | 400 | 400 | 400 | 400 | 400 | 400 | 300 | 280 | 280 | 335 | 400 | 400 | 400 | 355 | 71 | 160 |
| **1 120 000** | 160 | 400 | 400 | 335 | 315 | 400 | 355 | 335 | 375 | 200 | 170 | 180 | 250 | 335 | 400 | 375 | 280 | 33,5 | 160 |
| | 112 | 400 | 400 | 400 | 400 | 400 | 375 | 375 | 375 | 280 | 250 | 265 | 315 | 375 | 400 | 400 | 335 | 63 | 160 |
| **1 400 000** | 160 | 400 | 400 | 250 | 236 | 335 | 335 | 315 | 335 | 170 | 140 | 150 | 212 | 315 | 375 | 335 | 236 | 23,6 | 160 |
| | 112 | 400 | 400 | 400 | 400 | 400 | 355 | 335 | 355 | 250 | 224 | 236 | 280 | 355 | 375 | 355 | 300 | 53 | 150 |
| **1 800 000** | 160 | 375 | 300 | 160 | 140 | 212 | 300 | 280 | 315 | 132 | 112 | 125 | 180 | 280 | 335 | 315 | 212 | 15 | 150 |
| | 112 | 375 | 400 | 400 | 400 | 375 | 335 | 315 | 335 | 212 | 190 | 200 | 250 | 315 | 355 | 335 | 265 | 45 | 140 |
| **2 240 000** | 160 | 335 | 112 | – | – | 63 | 280 | 265 | 280 | 100 | 75 | 90 | 140 | 250 | 315 | 265 | 170 | – | 140 |
| | 112 | 355 | 400 | 400 | 375 | 335 | 300 | 280 | 315 | 190 | 170 | 180 | 224 | 280 | 335 | 315 | 250 | 37,5 | 132 |
| **2 800 000** | 112 | 335 | 375 | 315 | 300 | 315 | 280 | 265 | 280 | 170 | 140 | 160 | 200 | 265 | 315 | 280 | 224 | 31,5 | 125 |
| | 80 | 335 | 355 | 375 | 355 | 315 | 300 | 280 | 300 | 212 | 200 | 212 | 236 | 280 | 315 | 300 | 250 | 50 | 118 |
| **3 550 000** | 112 | 300 | 355 | 250 | 236 | 300 | 250 | 250 | 265 | 140 | 118 | 132 | 180 | 250 | 280 | 265 | 200 | 23,6 | 118 |
| | 80 | 300 | 335 | 355 | 335 | 300 | 265 | 265 | 280 | 190 | 170 | 180 | 224 | 265 | 280 | 280 | 236 | 45 | 112 |
| **4 500 000** | 112 | 280 | 315 | 180 | 170 | 236 | 236 | 224 | 236 | 118 | 100 | 112 | 150 | 224 | 265 | 236 | 170 | 17 | 112 |
| | 80 | 280 | 315 | 335 | 315 | 280 | 250 | 236 | 250 | 170 | 150 | 160 | 200 | 236 | 265 | 250 | 212 | 37,5 | 106 |
| max **400** | | | | | | | | | | | | | | | | | | max **80** | max **160** |

size **5601**

| | | | | | | | | | | | | | | | | | | | |
|---|---|---|---|---|---|---|---|---|---|---|---|---|---|---|---|---|---|---|---|
| **355 000** | 265 | 400 | 400 | 400 | 400 | 400 | 400 | 400 | 400 | 400 | 400 | 400 | 400 | 400 | 400 | 400 | 400 | 80 | 160 |
| | 190 | 400 | 400 | 400 | 400 | 400 | 400 | 400 | 400 | 400 | 400 | 400 | 400 | 400 | 400 | 400 | 400 | 80 | 160 |
| **450 000** | 265 | 400 | 400 | 400 | 400 | 400 | 400 | 400 | 400 | 400 | 400 | 400 | 400 | 400 | 400 | 400 | 400 | 80 | 160 |
| | 190 | 400 | 400 | 400 | 400 | 400 | 400 | 400 | 400 | 400 | 400 | 400 | 400 | 400 | 400 | 400 | 400 | 80 | 160 |
| **560 000** | 265 | 400 | 400 | 400 | 400 | 400 | 400 | 400 | 400 | 400 | 335 | 355 | 400 | 400 | 400 | 400 | 400 | 80 | 160 |
| | 190 | 400 | 400 | 400 | 400 | 400 | 400 | 400 | 400 | 400 | 400 | 400 | 400 | 400 | 400 | 400 | 400 | 80 | 160 |
| **710 000** | 265 | 400 | 400 | 400 | 400 | 400 | 400 | 400 | 400 | 355 | 300 | 315 | 400 | 400 | 400 | 400 | 400 | 80 | 160 |
| | 190 | 400 | 400 | 400 | 400 | 400 | 400 | 400 | 400 | 400 | 400 | 400 | 400 | 400 | 400 | 400 | 400 | 80 | 160 |
| **900 000** | 265 | 400 | 400 | 400 | 400 | 400 | 400 | 400 | 400 | 300 | 236 | 265 | 355 | 400 | 400 | 400 | 400 | 63 | 160 |
| | 190 | 400 | 400 | 400 | 400 | 400 | 400 | 400 | 400 | 400 | 355 | 375 | 400 | 400 | 400 | 400 | 400 | 80 | 160 |
| | 132 | 400 | 400 | 400 | 400 | 400 | 400 | 400 | 400 | 400 | 400 | 400 | 400 | 400 | 400 | 400 | 400 | 80 | 160 |
| **1 120 000** | 190 | 400 | 400 | 400 | 400 | 400 | 400 | 400 | 400 | 375 | 315 | 335 | 400 | 400 | 400 | 400 | 400 | 80 | 160 |
| | 132 | 400 | 400 | 400 | 400 | 400 | 400 | 400 | 400 | 400 | 400 | 400 | 400 | 400 | 400 | 400 | 400 | 80 | 160 |
| **1 400 000** | 190 | 400 | 400 | 400 | 400 | 400 | 400 | 400 | 400 | 335 | 280 | 300 | 375 | 400 | 400 | 400 | 400 | 80 | 160 |
| | 132 | 400 | 400 | 400 | 400 | 400 | 400 | 400 | 400 | 400 | 375 | 375 | 400 | 400 | 400 | 400 | 400 | 80 | 160 |
| **1 800 000** | 190 | 400 | 400 | 400 | 400 | 400 | 400 | 400 | 400 | 280 | 236 | 250 | 335 | 400 | 400 | 400 | 400 | 67 | 160 |
| | 132 | 400 | 400 | 400 | 400 | 400 | 400 | 400 | 400 | 355 | 335 | 335 | 400 | 400 | 400 | 400 | 400 | 80 | 160 |
| **2 240 000** | 190 | 400 | 400 | 400 | 400 | 400 | 400 | 375 | 400 | 250 | 200 | 212 | 300 | 400 | 400 | 400 | 355 | 56 | 160 |
| | 132 | 400 | 400 | 400 | 400 | 400 | 400 | 400 | 400 | 335 | 300 | 300 | 355 | 400 | 400 | 400 | 400 | 80 | 160 |
| **2 800 000** | 132 | 400 | 400 | 400 | 400 | 400 | 400 | 375 | 400 | 300 | 265 | 280 | 335 | 400 | 400 | 400 | 375 | 80 | 160 |
| | 95 | 400 | 400 | 400 | 400 | 400 | 400 | 400 | 400 | 355 | 315 | 335 | 375 | 400 | 400 | 400 | 400 | 80 | 160 |
| **3 550 000** | 132 | 400 | 400 | 400 | 400 | 400 | 375 | 335 | 355 | 265 | 224 | 236 | 300 | 375 | 400 | 400 | 335 | 67 | 160 |
| | 95 | 400 | 400 | 400 | 400 | 400 | 400 | 375 | 375 | 315 | 280 | 300 | 335 | 400 | 400 | 400 | 375 | 80 | 160 |
| **4 500 000** | 132 | 375 | 400 | 400 | 400 | 400 | 335 | 315 | 335 | 236 | 200 | 212 | 265 | 355 | 400 | 400 | 315 | 60 | 160 |
| | 95 | 400 | 400 | 400 | 400 | 400 | 355 | 335 | 355 | 280 | 250 | 265 | 315 | 375 | 400 | 400 | 335 | 80 | 160 |
| max **400** | | | | | | | | | | | | | | | | | | max **80** | max **160** |

1) An axial load of up to 0,2 times the value in the table is permissible, simultaneously with the radial load. If exceeded consult us.
2) An unfavorable direction of load can limit $F_{r2}$ to $0,71 \cdot F_{r2max}$
3) For radial loads acting simultaneously on both sides of double extension low speed shaft or for hollow low speed shaft, consult us.

## 11.2 - Axial loads $F_{a2}$ [kN] or radial loads $F_{r2}$ [kN] on low speed shaft end

Radial load on **low speed wheel end**[3)]

size **5600**

| $n_2 \cdot L_h$ | $M_2$ | $F_{r2}$ [1) 2)] | | | | | | | | | | | | | | | | $F_{a2}$ [1)] | |
|---|---|---|---|---|---|---|---|---|---|---|---|---|---|---|---|---|---|---|---|
| | | 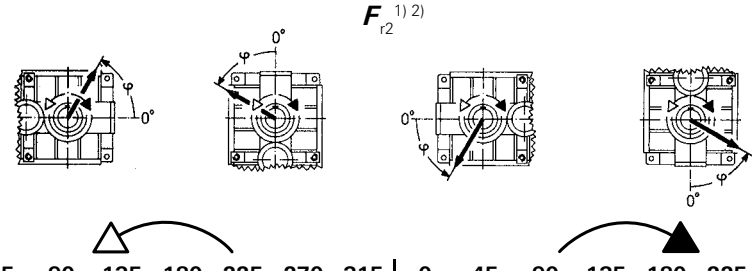 | | | | | | | | | | | | | | | | | |
| min⁻¹·h | kN m | **0** | **45** | **90** | **135** | **180** | **225** | **270** | **315** | **0** | **45** | **90** | **135** | **180** | **225** | **270** | **315** | | |
| **355 000** | 224 | 400 | 400 | 400 | 400 | 400 | 400 | 400 | 400 | 212 | 150 | 160 | 265 | 400 | 400 | 400 | 375 | 47,5 | 160 |
| | 160 | 400 | 400 | 400 | 400 | 400 | 400 | 400 | 400 | 335 | 280 | 300 | 375 | 400 | 400 | 400 | 400 | 80 | 160 |
| **450 000** | 224 | 400 | 400 | 400 | 400 | 400 | 400 | 355 | 375 | 160 | 112 | 118 | 200 | 400 | 400 | 400 | 315 | 35,5 | 160 |
| | 160 | 400 | 400 | 400 | 400 | 400 | 400 | 400 | 400 | 300 | 236 | 250 | 335 | 400 | 400 | 400 | 400 | 75 | 160 |
| **560 000** | 224 | 400 | 400 | 400 | 400 | 400 | 375 | 315 | 355 | 112 | 71 | 80 | 150 | 375 | 400 | 400 | 265 | 23,6 | 160 |
| | 160 | 400 | 400 | 400 | 400 | 400 | 400 | 375 | 400 | 250 | 212 | 224 | 300 | 400 | 400 | 400 | 375 | 63 | 160 |
| **710 000** | 224 | 400 | 400 | 400 | 335 | 400 | 335 | 280 | 315 | – | – | – | 67 | 315 | 400 | 400 | 180 | 17 | 160 |
| | 160 | 400 | 400 | 400 | 400 | 400 | 375 | 335 | 375 | 212 | 170 | 180 | 265 | 400 | 400 | 400 | 335 | 53 | 160 |
| **900 000** | 224 | 375 | 400 | 224 | 190 | 250 | 300 | 250 | 280 | – | – | – | – | – | – | – | – | – | 160 |
| | 160 | 400 | 400 | 400 | 400 | 400 | 355 | 315 | 335 | 180 | 132 | 140 | 224 | 375 | 400 | 400 | 300 | 42,5 | 160 |
| | 112 | 400 | 400 | 400 | 400 | 400 | 400 | 355 | 375 | 280 | 236 | 250 | 315 | 400 | 400 | 400 | 375 | 71 | 160 |
| **1 120 000** | 160 | 375 | 400 | 400 | 400 | 400 | 315 | 280 | 300 | 140 | 106 | 112 | 180 | 335 | 400 | 400 | 265 | 33,5 | 160 |
| | 112 | 400 | 400 | 400 | 400 | 400 | 355 | 335 | 335 | 250 | 200 | 212 | 280 | 375 | 400 | 400 | 335 | 63 | 160 |
| **1 400 000** | 160 | 355 | 400 | 400 | 400 | 400 | 300 | 250 | 280 | 112 | 75 | 85 | 140 | 300 | 400 | 400 | 224 | 23,6 | 160 |
| | 112 | 375 | 400 | 400 | 400 | 400 | 335 | 300 | 315 | 212 | 180 | 190 | 250 | 355 | 400 | 400 | 300 | 53 | 150 |
| **1 800 000** | 160 | 315 | 400 | 375 | 335 | 355 | 265 | 224 | 236 | 71 | – | – | 100 | 265 | 400 | 355 | 180 | 15 | 150 |
| | 112 | 355 | 400 | 400 | 400 | 375 | 300 | 265 | 280 | 180 | 150 | 160 | 212 | 315 | 400 | 375 | 265 | 45 | 140 |
| **2 240 000** | 160 | 300 | 400 | 265 | 236 | 300 | 236 | 200 | 212 | – | – | – | – | 212 | 375 | 315 | 118 | – | 140 |
| | 112 | 315 | 400 | 400 | 400 | 355 | 280 | 250 | 265 | 160 | 125 | 132 | 190 | 280 | 375 | 355 | 250 | 37,5 | 132 |
| **2 800 000** | 112 | 300 | 375 | 400 | 400 | 315 | 250 | 224 | 236 | 132 | 100 | 106 | 160 | 265 | 355 | 315 | 212 | 31,5 | 125 |
| | 80 | 315 | 375 | 400 | 375 | 335 | 280 | 250 | 265 | 200 | 170 | 170 | 224 | 280 | 335 | 335 | 265 | 50 | 118 |
| **3 550 000** | 112 | 280 | 355 | 400 | 375 | 300 | 224 | 220 | 212 | 106 | 75 | 85 | 132 | 236 | 315 | 300 | 190 | 23,6 | 118 |
| | 80 | 280 | 355 | 375 | 375 | 315 | 250 | 236 | 236 | 170 | 140 | 150 | 200 | 265 | 315 | 300 | 236 | 45 | 112 |
| **4 500 000** | 112 | 250 | 335 | 335 | 300 | 280 | 212 | 180 | 190 | 80 | – | – | 106 | 212 | 300 | 280 | 160 | 17 | 112 |
| | 80 | 265 | 335 | 355 | 335 | 280 | 236 | 212 | 224 | 150 | 125 | 132 | 170 | 250 | 300 | 280 | 212 | 37,5 | 106 |
| max **400** | | | | | | | | | | | | | | | | | | max **80** | max **160** |

size **5601**

| | | | | | | | | | | | | | | | | | | | |
|---|---|---|---|---|---|---|---|---|---|---|---|---|---|---|---|---|---|---|---|
| **355 000** | 265 | 400 | 400 | 400 | 400 | 400 | 400 | 400 | 400 | 400 | 355 | 375 | 400 | 400 | 400 | 400 | 400 | 80 | 160 |
| | 190 | 400 | 400 | 400 | 400 | 400 | 400 | 400 | 400 | 400 | 400 | 400 | 400 | 400 | 400 | 400 | 400 | 80 | 160 |
| **450 000** | 265 | 400 | 400 | 400 | 400 | 400 | 400 | 400 | 400 | 375 | 300 | 315 | 400 | 400 | 400 | 400 | 400 | 80 | 160 |
| | 190 | 400 | 400 | 400 | 400 | 400 | 400 | 400 | 400 | 400 | 400 | 400 | 400 | 400 | 400 | 400 | 400 | 80 | 160 |
| **560 000** | 265 | 400 | 400 | 400 | 400 | 400 | 400 | 400 | 400 | 335 | 250 | 265 | 375 | 400 | 400 | 400 | 400 | 80 | 160 |
| | 190 | 400 | 400 | 400 | 400 | 400 | 400 | 400 | 400 | 400 | 400 | 400 | 400 | 400 | 400 | 400 | 400 | 80 | 160 |
| **710 000** | 265 | 400 | 400 | 400 | 400 | 400 | 400 | 400 | 400 | 265 | 190 | 200 | 315 | 400 | 400 | 400 | 400 | 80 | 160 |
| | 190 | 400 | 400 | 400 | 400 | 400 | 400 | 400 | 400 | 400 | 335 | 355 | 400 | 400 | 400 | 400 | 400 | 80 | 160 |
| **900 000** | 265 | 400 | 400 | 400 | 400 | 400 | 400 | 375 | 400 | 212 | 140 | 150 | 250 | 400 | 400 | 400 | 400 | 53 | 160 |
| | 190 | 400 | 400 | 400 | 400 | 400 | 400 | 400 | 400 | 355 | 280 | 300 | 400 | 400 | 400 | 400 | 400 | 80 | 160 |
| | 132 | 400 | 400 | 400 | 400 | 400 | 400 | 400 | 400 | 400 | 400 | 400 | 400 | 400 | 400 | 400 | 400 | 80 | 160 |
| **1 120 000** | 190 | 400 | 400 | 400 | 400 | 400 | 400 | 400 | 400 | 315 | 250 | 265 | 355 | 400 | 400 | 400 | 400 | 80 | 160 |
| | 132 | 400 | 400 | 400 | 400 | 400 | 400 | 400 | 400 | 400 | 355 | 375 | 400 | 400 | 400 | 400 | 400 | 80 | 160 |
| **1 400 000** | 190 | 400 | 400 | 400 | 400 | 400 | 400 | 375 | 400 | 265 | 212 | 224 | 315 | 400 | 400 | 400 | 400 | 80 | 160 |
| | 132 | 400 | 400 | 400 | 400 | 400 | 400 | 400 | 400 | 375 | 315 | 335 | 400 | 400 | 400 | 400 | 400 | 80 | 160 |
| **1 800 000** | 190 | 400 | 400 | 400 | 400 | 400 | 400 | 335 | 355 | 224 | 170 | 170 | 265 | 400 | 400 | 400 | 375 | 60 | 160 |
| | 132 | 400 | 400 | 400 | 400 | 400 | 400 | 400 | 400 | 335 | 280 | 280 | 355 | 400 | 400 | 400 | 400 | 80 | 160 |
| **2 240 000** | 190 | 400 | 400 | 400 | 400 | 400 | 355 | 300 | 315 | 180 | 132 | 140 | 224 | 400 | 400 | 400 | 335 | 47,5 | 160 |
| | 132 | 400 | 400 | 400 | 400 | 400 | 400 | 355 | 375 | 300 | 250 | 250 | 335 | 400 | 400 | 400 | 400 | 80 | 160 |
| **2 800 000** | 132 | 400 | 400 | 400 | 400 | 400 | 375 | 335 | 335 | 265 | 212 | 224 | 300 | 400 | 400 | 400 | 375 | 75 | 160 |
| | 95 | 400 | 400 | 400 | 400 | 400 | 400 | 355 | 375 | 335 | 280 | 300 | 355 | 400 | 400 | 400 | 400 | 80 | 160 |
| **3 550 000** | 132 | 375 | 400 | 400 | 400 | 400 | 335 | 300 | 315 | 224 | 180 | 190 | 250 | 375 | 400 | 400 | 335 | 63 | 160 |
| | 95 | 400 | 400 | 400 | 400 | 400 | 375 | 335 | 355 | 300 | 250 | 265 | 315 | 400 | 400 | 400 | 375 | 80 | 160 |
| **4 500 000** | 132 | 355 | 400 | 400 | 400 | 400 | 300 | 265 | 280 | 190 | 150 | 160 | 224 | 355 | 400 | 400 | 315 | 53 | 160 |
| | 95 | 375 | 400 | 400 | 400 | 400 | 335 | 300 | 315 | 265 | 224 | 224 | 280 | 375 | 400 | 400 | 355 | 80 | 150 |
| max **400** | | | | | | | | | | | | | | | | | | max **80** | max **160** |

1) An axial load of up to 0,2 times the value in the table is permissible, simultaneously with the radial load. If exceeded consult us.
2) An unfavorable direction of load can limit $F_{r2}$ to $0{,}71 \cdot F_{r2max}$
3) For radial loads acting simultaneously on both sides of double extension low speed shaft or for hollow low speed shaft, consult us.

## 11.2 - Axial loads $F_{a2}$ [kN] or radial loads $F_{r2}$ [kN] on low speed shaft end

Radial load on **opposite low speed wheel end**[3)]

size **6300**

| $n_2 \cdot L_h$ | $M_2$ | $F_{r2}$ [1) 2)] | | | | | | | | | | | | | | | | $F_{a2}$ [1)] | |
|---|---|---|---|---|---|---|---|---|---|---|---|---|---|---|---|---|---|---|---|
| | | 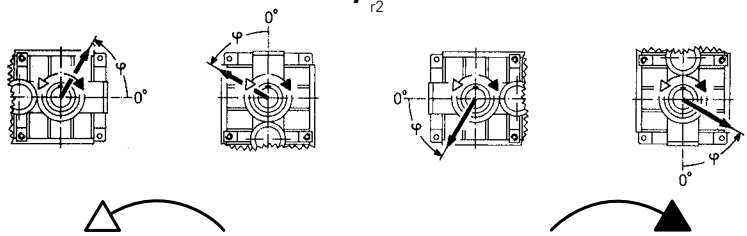 | | | | | | | | | | | | | | | | | |
| min⁻¹·h | kN m | **0** | **45** | **90** | **135** | **180** | **225** | **270** | **315** | **0** | **45** | **90** | **135** | **180** | **225** | **270** | **315** | | |
| **355 000** | 315 | 400 | 400 | 400 | 400 | 400 | 400 | 400 | 400 | 400 | 400 | 400 | 400 | 400 | 400 | 400 | 400 | 160 | 80 |
| | 224 | 400 | 400 | 400 | 400 | 400 | 400 | 400 | 400 | 400 | 400 | 400 | 400 | 400 | 400 | 400 | 400 | 160 | 80 |
| **450 000** | 315 | 400 | 400 | 400 | 400 | 400 | 400 | 400 | 400 | 400 | 400 | 400 | 400 | 400 | 400 | 400 | 400 | 160 | 80 |
| | 224 | 400 | 400 | 400 | 400 | 400 | 400 | 400 | 400 | 400 | 400 | 400 | 400 | 400 | 400 | 400 | 400 | 160 | 80 |
| **560 000** | 315 | 400 | 400 | 375 | 355 | 400 | 400 | 400 | 400 | 400 | 400 | 400 | 400 | 400 | 400 | 400 | 400 | 160 | 80 |
| | 224 | 400 | 400 | 400 | 400 | 400 | 400 | 400 | 400 | 400 | 400 | 400 | 400 | 400 | 400 | 400 | 400 | 160 | 80 |
| **710 000** | 315 | 400 | 400 | 335 | 300 | 355 | 400 | 400 | 400 | 400 | 400 | 400 | 400 | 400 | 400 | 400 | 400 | 160 | 80 |
| | 224 | 400 | 400 | 400 | 400 | 400 | 400 | 400 | 400 | 400 | 400 | 400 | 400 | 400 | 400 | 400 | 400 | 160 | 80 |
| **900 000** | 315 | 400 | 375 | 265 | 250 | 300 | 400 | 400 | 400 | 400 | 335 | 375 | 400 | 400 | 400 | 400 | 400 | 160 | 63 |
| | 224 | 400 | 400 | 375 | 355 | 400 | 300 | 400 | 400 | 400 | 400 | 400 | 400 | 400 | 400 | 400 | 400 | 160 | 80 |
| | 160 | 400 | 400 | 400 | 400 | 400 | 400 | 400 | 400 | 400 | 400 | 400 | 400 | 400 | 400 | 400 | 400 | 160 | 80 |
| **1 120 000** | 224 | 400 | 400 | 355 | 315 | 355 | 400 | 400 | 400 | 400 | 400 | 400 | 400 | 400 | 400 | 400 | 400 | 160 | 80 |
| | 160 | 400 | 400 | 400 | 400 | 400 | 400 | 400 | 400 | 400 | 400 | 400 | 400 | 400 | 400 | 400 | 400 | 160 | 80 |
| **1 400 000** | 224 | 400 | 375 | 300 | 280 | 315 | 400 | 400 | 400 | 400 | 400 | 400 | 400 | 400 | 400 | 400 | 400 | 160 | 80 |
| | 160 | 400 | 400 | 375 | 355 | 400 | 400 | 400 | 400 | 400 | 400 | 400 | 400 | 400 | 400 | 400 | 400 | 160 | 80 |
| **1 800 000** | 224 | 400 | 335 | 265 | 250 | 280 | 375 | 400 | 400 | 400 | 400 | 400 | 400 | 400 | 400 | 400 | 400 | 160 | 71 |
| | 160 | 400 | 400 | 335 | 315 | 355 | 400 | 400 | 400 | 400 | 400 | 400 | 400 | 400 | 400 | 400 | 400 | 160 | 80 |
| **2 240 000** | 224 | 400 | 300 | 236 | 212 | 250 | 335 | 400 | 400 | 400 | 335 | 355 | 400 | 400 | 400 | 375 | 400 | 160 | 56 |
| | 160 | 400 | 355 | 300 | 280 | 315 | 375 | 400 | 400 | 400 | 400 | 400 | 400 | 400 | 400 | 400 | 400 | 160 | 80 |
| **2 800 000** | 160 | 400 | 335 | 280 | 265 | 280 | 355 | 400 | 400 | 400 | 400 | 400 | 400 | 400 | 400 | 375 | 400 | 160 | 80 |
| | 112 | 400 | 375 | 335 | 315 | 335 | 375 | 400 | 400 | 400 | 400 | 400 | 400 | 400 | 400 | 400 | 400 | 160 | 80 |
| **3 550 000** | 160 | 375 | 300 | 236 | 224 | 250 | 315 | 400 | 400 | 400 | 400 | 400 | 400 | 400 | 375 | 355 | 355 | 160 | 71 |
| | 112 | 400 | 335 | 300 | 280 | 300 | 355 | 400 | 400 | 400 | 400 | 400 | 400 | 400 | 375 | 375 | 375 | 160 | 80 |
| **4 500 000** | 160 | 335 | 265 | 212 | 200 | 224 | 280 | 355 | 400 | 375 | 355 | 400 | 400 | 400 | 335 | 315 | 335 | 160 | 60 |
| | 112 | 355 | 315 | 265 | 250 | 280 | 315 | 375 | 400 | 375 | 400 | 400 | 400 | 400 | 355 | 335 | 355 | 160 | 80 |
| | | max **400** | | | | | | | | | | | | | | | | max **160** | max **80** |

**11**

size **6301**

| | | | | | | | | | | | | | | | | | | | |
|---|---|---|---|---|---|---|---|---|---|---|---|---|---|---|---|---|---|---|---|
| **355 000** | 375 | 400 | 400 | 400 | 375 | 400 | 400 | 400 | 400 | 400 | 400 | 400 | 400 | 400 | 400 | 400 | 400 | 160 | 80 |
| | 265 | 400 | 400 | 400 | 400 | 400 | 400 | 400 | 400 | 400 | 400 | 400 | 400 | 400 | 400 | 400 | 400 | 160 | 80 |
| **450 000** | 375 | 400 | 400 | 355 | 335 | 375 | 400 | 400 | 400 | 400 | 400 | 400 | 400 | 400 | 400 | 400 | 400 | 160 | 80 |
| | 265 | 400 | 400 | 400 | 400 | 400 | 400 | 400 | 400 | 400 | 400 | 400 | 400 | 400 | 400 | 400 | 400 | 160 | 80 |
| **560 000** | 375 | 400 | 400 | 315 | 280 | 335 | 400 | 400 | 400 | 400 | 335 | 375 | 400 | 400 | 400 | 400 | 400 | 160 | 67 |
| | 265 | 400 | 400 | 400 | 400 | 400 | 400 | 400 | 400 | 400 | 400 | 400 | 400 | 400 | 400 | 400 | 400 | 160 | 80 |
| **710 000** | 375 | 400 | 375 | 250 | 224 | 280 | 400 | 400 | 400 | 315 | 200 | 224 | 400 | 400 | 400 | 400 | 400 | 160 | 45 |
| | 265 | 400 | 400 | 375 | 355 | 400 | 400 | 400 | 400 | 400 | 400 | 400 | 400 | 400 | 400 | 400 | 400 | 160 | 80 |
| **900 000** | 375 | 400 | 315 | 200 | 180 | 224 | 355 | 400 | 400 | 112 | 67 | 75 | 200 | 400 | 400 | 400 | 400 | 160 | 28 |
| | 265 | 400 | 400 | 335 | 315 | 355 | 400 | 400 | 400 | 400 | 400 | 400 | 400 | 400 | 400 | 400 | 400 | 160 | 80 |
| | 190 | 400 | 400 | 400 | 400 | 400 | 400 | 400 | 400 | 400 | 400 | 400 | 400 | 400 | 400 | 400 | 400 | 160 | 80 |
| **1 120 000** | 265 | 400 | 375 | 280 | 280 | 315 | 400 | 400 | 400 | 400 | 400 | 400 | 400 | 400 | 400 | 400 | 400 | 160 | 75 |
| | 190 | 400 | 400 | 375 | 400 | 400 | 400 | 400 | 400 | 400 | 400 | 400 | 400 | 400 | 400 | 400 | 400 | 160 | 80 |
| **1 400 000** | 265 | 400 | 335 | 265 | 236 | 280 | 375 | 400 | 400 | 400 | 355 | 375 | 400 | 400 | 400 | 400 | 400 | 160 | 60 |
| | 190 | 400 | 400 | 355 | 335 | 355 | 400 | 400 | 400 | 400 | 400 | 400 | 400 | 400 | 400 | 400 | 400 | 160 | 80 |
| **1 800 000** | 265 | 400 | 300 | 212 | 190 | 236 | 335 | 400 | 400 | 355 | 236 | 265 | 400 | 400 | 400 | 400 | 400 | 160 | 45 |
| | 190 | 400 | 375 | 300 | 280 | 315 | 400 | 400 | 400 | 400 | 400 | 400 | 400 | 400 | 400 | 400 | 400 | 160 | 80 |
| **2 240 000** | 265 | 400 | 265 | 180 | 160 | 200 | 300 | 400 | 400 | 224 | 140 | 160 | 335 | 400 | 400 | 355 | 375 | 160 | 33,5 |
| | 190 | 400 | 335 | 265 | 250 | 280 | 355 | 400 | 400 | 400 | 400 | 400 | 400 | 400 | 400 | 400 | 400 | 160 | 75 |
| **2 800 000** | 190 | 400 | 300 | 236 | 224 | 250 | 335 | 400 | 400 | 400 | 400 | 400 | 400 | 400 | 400 | 355 | 375 | 160 | 63 |
| | 132 | 400 | 355 | 300 | 300 | 315 | 375 | 400 | 400 | 400 | 400 | 400 | 400 | 400 | 400 | 400 | 400 | 160 | 80 |
| **3 550 000** | 190 | 355 | 265 | 212 | 190 | 224 | 300 | 375 | 400 | 400 | 315 | 335 | 400 | 400 | 355 | 335 | 355 | 160 | 53 |
| | 132 | 375 | 315 | 280 | 265 | 280 | 335 | 400 | 400 | 400 | 400 | 400 | 400 | 400 | 375 | 355 | 375 | 160 | 80 |
| **4 500 000** | 190 | 335 | 236 | 180 | 160 | 190 | 265 | 355 | 400 | 335 | 236 | 250 | 400 | 400 | 335 | 300 | 315 | 160 | 40 |
| | 132 | 355 | 300 | 250 | 236 | 250 | 315 | 375 | 400 | 375 | 400 | 400 | 400 | 400 | 355 | 335 | 335 | 160 | 75 |
| | | max **400** | | | | | | | | | | | | | | | | max **160** | max **80** |

1) An axial load of up to 0,2 times the value in the table is permissible, simultaneously with the radial load. If exceeded consult us.
2) An unfavorable direction of load can limit $F_{r2}$ to $0{,}71 \cdot F_{r2max}$
3) For radial loads acting simultaneously on both sides of double extension low speed shaft or for hollow low speed shaft, consult us.

2586-01.02

## 11.2 - Axial loads $F_{a2}$ [kN] or radial loads $F_{r2}$ [kN] on low speed shaft end

Radial load on **low speed wheel end**[3)]

size **6300**

| $n_2 \cdot L_h$ | $M_2$ | $F_{r2}$ [1) 2)] | | | | | | | | | | | | | | | | $F_{a2}$ [1)] | |
|---|---|---|---|---|---|---|---|---|---|---|---|---|---|---|---|---|---|---|---|
| | | 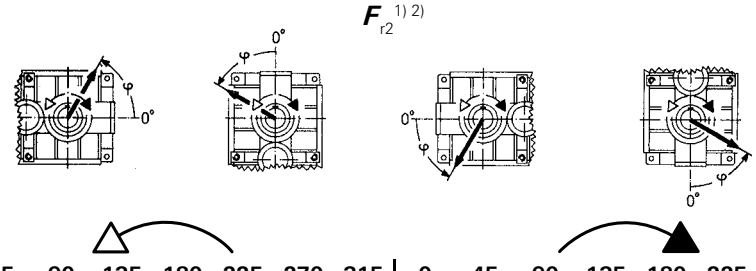 | | | | | | | | | | | | | | | | | |
| min⁻¹·h | kN m | **0** | **45** | **90** | **135** | **180** | **225** | **270** | **315** | **0** | **45** | **90** | **135** | **180** | **225** | **270** | **315** | | |
| **355 000** | 315 | 400 | 400 | 355 | 355 | 400 | 400 | 400 | 400 | 400 | 400 | 400 | 400 | 400 | 400 | 400 | 400 | 160 | 80 |
| | 224 | 400 | 400 | 400 | 400 | 400 | 400 | 400 | 400 | 400 | 400 | 400 | 400 | 400 | 400 | 400 | 400 | 160 | 80 |
| **450 000** | 315 | 400 | 400 | 300 | 280 | 355 | 400 | 400 | 400 | 400 | 400 | 400 | 400 | 400 | 400 | 400 | 400 | 160 | 80 |
| | 224 | 400 | 400 | 400 | 400 | 400 | 400 | 400 | 400 | 400 | 400 | 400 | 400 | 400 | 400 | 400 | 400 | 160 | 80 |
| **560 000** | 315 | 400 | 355 | 236 | 224 | 300 | 400 | 400 | 400 | 400 | 400 | 400 | 400 | 400 | 400 | 400 | 400 | 160 | 80 |
| | 224 | 400 | 400 | 400 | 375 | 400 | 400 | 400 | 400 | 400 | 400 | 400 | 400 | 400 | 400 | 400 | 400 | 160 | 80 |
| **710 000** | 315 | 400 | 300 | 190 | 170 | 236 | 400 | 400 | 400 | 400 | 400 | 400 | 400 | 400 | 400 | 400 | 400 | 160 | 71 |
| | 224 | 400 | 400 | 335 | 315 | 400 | 400 | 400 | 400 | 400 | 400 | 400 | 400 | 400 | 400 | 400 | 400 | 160 | 80 |
| **900 000** | 315 | 400 | 236 | 132 | 125 | 180 | 400 | 400 | 400 | 400 | 400 | 400 | 400 | 400 | 400 | 355 | 400 | 160 | 50 |
| | 224 | 400 | 400 | 280 | 280 | 335 | 400 | 400 | 400 | 400 | 400 | 400 | 400 | 400 | 400 | 400 | 400 | 160 | 80 |
| | 160 | 400 | 400 | 400 | 375 | 400 | 400 | 400 | 400 | 400 | 400 | 400 | 400 | 400 | 400 | 400 | 400 | 160 | 80 |
| **1 120 000** | 224 | 400 | 355 | 250 | 236 | 300 | 400 | 400 | 400 | 400 | 400 | 400 | 400 | 400 | 400 | 400 | 400 | 160 | 80 |
| | 160 | 400 | 400 | 355 | 335 | 400 | 400 | 400 | 400 | 400 | 400 | 400 | 400 | 400 | 400 | 400 | 400 | 160 | 80 |
| **1 400 000** | 224 | 400 | 300 | 212 | 190 | 250 | 400 | 400 | 400 | 400 | 400 | 400 | 400 | 400 | 400 | 355 | 400 | 160 | 75 |
| | 160 | 400 | 400 | 315 | 300 | 355 | 400 | 400 | 400 | 400 | 400 | 400 | 400 | 400 | 400 | 400 | 400 | 160 | 80 |
| **1 800 000** | 224 | 400 | 250 | 160 | 150 | 200 | 355 | 400 | 400 | 400 | 400 | 400 | 400 | 400 | 355 | 315 | 375 | 160 | 60 |
| | 160 | 400 | 355 | 265 | 265 | 315 | 400 | 400 | 400 | 400 | 400 | 400 | 400 | 400 | 400 | 375 | 400 | 160 | 80 |
| **2 240 000** | 224 | 400 | 212 | 132 | 118 | 170 | 315 | 400 | 400 | 400 | 400 | 400 | 400 | 400 | 315 | 280 | 335 | 160 | 47,5 |
| | 160 | 400 | 315 | 236 | 224 | 280 | 400 | 400 | 400 | 400 | 400 | 400 | 400 | 400 | 355 | 335 | 375 | 160 | 80 |
| **2 800 000** | 160 | 400 | 280 | 200 | 190 | 236 | 355 | 400 | 400 | 400 | 400 | 400 | 400 | 400 | 335 | 315 | 355 | 160 | 75 |
| | 112 | 400 | 335 | 280 | 265 | 315 | 400 | 400 | 400 | 400 | 400 | 400 | 400 | 400 | 375 | 355 | 375 | 160 | 80 |
| **3 550 000** | 160 | 375 | 236 | 170 | 160 | 212 | 315 | 400 | 400 | 400 | 400 | 400 | 400 | 375 | 300 | 280 | 315 | 160 | 63 |
| | 112 | 400 | 315 | 250 | 236 | 280 | 355 | 400 | 400 | 400 | 400 | 400 | 400 | 400 | 335 | 315 | 355 | 160 | 80 |
| **4 500 000** | 160 | 335 | 212 | 140 | 132 | 170 | 280 | 400 | 400 | 375 | 400 | 400 | 400 | 355 | 280 | 250 | 300 | 160 | 53 |
| | 112 | 375 | 280 | 224 | 212 | 250 | 335 | 400 | 400 | 400 | 400 | 400 | 400 | 375 | 315 | 300 | 315 | 160 | 80 |
| max **400** | | | | | | | | | | | | | | | | | | max **160** | max **80** |

size **6301**

| | | | | | | | | | | | | | | | | | | | |
|---|---|---|---|---|---|---|---|---|---|---|---|---|---|---|---|---|---|---|---|
| **355 000** | 375 | 400 | 400 | 250 | 236 | 315 | 400 | 400 | 400 | 400 | 400 | 400 | 400 | 400 | 400 | 400 | 400 | 160 | 80 |
| | 265 | 400 | 400 | 400 | 400 | 400 | 400 | 400 | 400 | 400 | 400 | 400 | 400 | 400 | 400 | 400 | 400 | 160 | 80 |
| **450 000** | 375 | 400 | 315 | 190 | 170 | 250 | 400 | 400 | 400 | 400 | 400 | 400 | 400 | 400 | 400 | 400 | 400 | 160 | 71 |
| | 265 | 400 | 400 | 375 | 355 | 400 | 400 | 400 | 400 | 400 | 400 | 400 | 400 | 400 | 400 | 400 | 400 | 160 | 80 |
| **560 000** | 375 | 400 | 250 | 132 | 125 | 180 | 400 | 400 | 400 | 400 | 400 | 400 | 400 | 400 | 400 | 400 | 400 | 160 | 53 |
| | 265 | 400 | 400 | 315 | 300 | 375 | 400 | 400 | 400 | 400 | 400 | 400 | 400 | 400 | 400 | 400 | 400 | 160 | 80 |
| **710 000** | 375 | 400 | 170 | 80 | 71 | 112 | 355 | 400 | 400 | 400 | 400 | 400 | 400 | 400 | 400 | 355 | 400 | 160 | 31,5 |
| | 265 | 400 | 375 | 265 | 250 | 335 | 400 | 400 | 400 | 400 | 400 | 400 | 400 | 400 | 400 | 400 | 400 | 160 | 80 |
| **900 000** | 375 | 400 | 71 | – | – | 40 | 250 | 400 | 400 | 400 | 400 | 400 | 400 | 400 | 335 | 315 | 375 | 160 | 13,2 |
| | 265 | 400 | 335 | 224 | 200 | 280 | 400 | 400 | 400 | 400 | 400 | 400 | 400 | 400 | 400 | 400 | 400 | 160 | 80 |
| | 190 | 400 | 400 | 335 | 335 | 400 | 400 | 400 | 400 | 400 | 400 | 400 | 400 | 400 | 400 | 400 | 400 | 160 | 80 |
| **1 120 000** | 265 | 400 | 280 | 180 | 170 | 224 | 400 | 400 | 400 | 400 | 400 | 400 | 400 | 400 | 400 | 355 | 400 | 160 | 67 |
| | 190 | 400 | 400 | 300 | 280 | 355 | 400 | 400 | 400 | 400 | 400 | 400 | 400 | 400 | 400 | 400 | 400 | 160 | 80 |
| **1 400 000** | 265 | 400 | 224 | 140 | 125 | 180 | 355 | 400 | 400 | 400 | 400 | 400 | 400 | 400 | 355 | 335 | 375 | 160 | 53 |
| | 190 | 400 | 355 | 265 | 250 | 315 | 400 | 400 | 400 | 400 | 400 | 400 | 400 | 400 | 400 | 400 | 400 | 160 | 80 |
| **1 800 000** | 265 | 400 | 170 | 95 | 85 | 125 | 300 | 400 | 400 | 400 | 400 | 400 | 400 | 400 | 315 | 280 | 335 | 160 | 35,5 |
| | 190 | 400 | 300 | 224 | 212 | 265 | 400 | 400 | 400 | 400 | 400 | 400 | 400 | 400 | 375 | 355 | 400 | 160 | 80 |
| **2 240 000** | 265 | 355 | 118 | 56 | 53 | 80 | 250 | 400 | 400 | 400 | 400 | 400 | 400 | 400 | 280 | 250 | 300 | 160 | 23,6 |
| | 190 | 400 | 265 | 190 | 180 | 224 | 355 | 400 | 400 | 400 | 400 | 400 | 400 | 400 | 335 | 315 | 355 | 160 | 71 |
| **2 800 000** | 190 | 400 | 236 | 150 | 140 | 190 | 315 | 400 | 400 | 400 | 400 | 400 | 400 | 400 | 315 | 280 | 335 | 160 | 56 |
| | 132 | 400 | 315 | 250 | 236 | 280 | 375 | 400 | 400 | 400 | 400 | 400 | 400 | 400 | 355 | 335 | 375 | 160 | 80 |
| **3 550 000** | 190 | 355 | 190 | 125 | 112 | 150 | 280 | 400 | 400 | 400 | 400 | 400 | 400 | 355 | 280 | 250 | 300 | 160 | 45 |
| | 132 | 400 | 280 | 212 | 212 | 250 | 355 | 400 | 400 | 400 | 400 | 400 | 400 | 400 | 315 | 300 | 335 | 160 | 80 |
| **4 500 000** | 190 | 315 | 160 | 90 | 85 | 118 | 250 | 400 | 400 | 375 | 400 | 400 | 400 | 335 | 250 | 224 | 265 | 160 | 33,5 |
| | 132 | 355 | 250 | 190 | 180 | 224 | 315 | 400 | 400 | 400 | 400 | 400 | 400 | 355 | 300 | 280 | 315 | 160 | 71 |
| max **400** | | | | | | | | | | | | | | | | | | max **160** | max **80** |

1) An axial load of up to 0,2 times the value in the table is permissible, simultaneously with the radial load. If exceeded consult us.
2) An unfavorable direction of load can limit $F_{r2}$ to $0{,}71 \cdot F_{r2max}$
3) For radial loads acting simultaneously on both sides of double extension low speed shaft or for hollow low speed shaft, consult us.

## 11.2 - Axial loads $F_{a2}$ [kN] or radial loads $F_{r2}$ [kN] on low speed shaft end

Radial load on **opposite low speed wheel end**[3)]

size **7101**

| $n_2 \cdot L_h$ | $M_2$ | $F_{r2}$ [1) 2)] | | | | | | | | | | | | | | | | $F_{a2}$ [1)] | |
|---|---|---|---|---|---|---|---|---|---|---|---|---|---|---|---|---|---|---|---|
| min⁻¹·h | kN m | **0** | **45** | **90** | **135** | **180** | **225** | **270** | **315** | **0** | **45** | **90** | **135** | **180** | **225** | **270** | **315** | | |
| **355 000** | 630 | 475 | 500 | 500 | 500 | 500 | 500 | 425 | 400 | 500 | 500 | 500 | 500 | 500 | 450 | 475 | 500 | 200 | 100 |
| **355 000** | 450 | 500 | 500 | 500 | 500 | 500 | 500 | 500 | 500 | 500 | 500 | 500 | 500 | 500 | 500 | 500 | 500 | 200 | 100 |
| **450 000** | 630 | 400 | 500 | 500 | 500 | 500 | 500 | 355 | 315 | 500 | 500 | 500 | 500 | 400 | 250 | 265 | 500 | 200 | 100 |
| **450 000** | 450 | 500 | 500 | 500 | 500 | 500 | 500 | 500 | 500 | 500 | 500 | 500 | 500 | 500 | 500 | 500 | 500 | 200 | 100 |
| **560 000** | 630 | 315 | 500 | 500 | 500 | 500 | 450 | 280 | 265 | 500 | 500 | 500 | 500 | 125 | 71 | 75 | 212 | 200 | 90 |
| **560 000** | 450 | 500 | 500 | 500 | 500 | 500 | 500 | 475 | 450 | 500 | 500 | 500 | 500 | 500 | 500 | 500 | 500 | 200 | 100 |
| **710 000** | 630 | 250 | 450 | 500 | 500 | 500 | 355 | 224 | 190 | 250 | 112 | 132 | 400 | – | – | – | – | 200 | 60 |
| **710 000** | 450 | 450 | 500 | 500 | 500 | 500 | 500 | 425 | 375 | 500 | 500 | 500 | 500 | 500 | 500 | 500 | 500 | 200 | 100 |
| **900 000** | 630 | 140 | 315 | 500 | 500 | 500 | 236 | 118 | 100 | 500 | 355 | 425 | 400 | – | – | – | – | 200 | 31,5 |
| **900 000** | 450 | 375 | 500 | 500 | 500 | 500 | 475 | 355 | 335 | 500 | 500 | 500 | 500 | 500 | 450 | 475 | 500 | 200 | 100 |
| **900 000** | 315 | 500 | 500 | 500 | 500 | 500 | 500 | 500 | 475 | 500 | 500 | 500 | 500 | 500 | 500 | 500 | 500 | 200 | 100 |
| **1 120 000** | 450 | 335 | 475 | 500 | 500 | 500 | 425 | 300 | 280 | 500 | 500 | 500 | 500 | 450 | 300 | 335 | 500 | 200 | 100 |
| **1 120 000** | 315 | 475 | 500 | 500 | 500 | 500 | 500 | 450 | 425 | 500 | 500 | 500 | 500 | 500 | 500 | 500 | 500 | 200 | 100 |
| **1 400 000** | 450 | 280 | 425 | 500 | 500 | 500 | 355 | 250 | 224 | 500 | 500 | 500 | 500 | 280 | 170 | 180 | 400 | 200 | 85 |
| **1 400 000** | 315 | 425 | 500 | 500 | 500 | 500 | 475 | 400 | 375 | 500 | 500 | 500 | 500 | 500 | 500 | 500 | 500 | 200 | 100 |
| **1 800 000** | 450 | 224 | 355 | 500 | 500 | 500 | 300 | 200 | 170 | 500 | 500 | 475 | 500 | 45 | 23,6 | 26,5 | 80 | 200 | 60 |
| **1 800 000** | 315 | 355 | 475 | 500 | 500 | 500 | 425 | 335 | 315 | 500 | 500 | 500 | 500 | 500 | 500 | 500 | 500 | 200 | 100 |
| **2 240 000** | 315 | 315 | 425 | 500 | 500 | 500 | 400 | 300 | 280 | 500 | 500 | 500 | 500 | 500 | 450 | 475 | 500 | 200 | 100 |
| **2 240 000** | 224 | 400 | 500 | 500 | 500 | 500 | 450 | 400 | 375 | 500 | 500 | 500 | 500 | 500 | 500 | 500 | 500 | 200 | 100 |
| **2 800 000** | 315 | 280 | 375 | 500 | 500 | 475 | 335 | 265 | 236 | 500 | 475 | 450 | 475 | 475 | 335 | 355 | 500 | 190 | 95 |
| **2 800 000** | 224 | 375 | 450 | 500 | 500 | 500 | 425 | 355 | 335 | 500 | 500 | 475 | 500 | 500 | 500 | 500 | 500 | 200 | 100 |
| **3 550 000** | 315 | 236 | 335 | 475 | 500 | 425 | 300 | 212 | 200 | 500 | 450 | 400 | 425 | 335 | 224 | 250 | 450 | 180 | 80 |
| **3 550 000** | 224 | 335 | 400 | 500 | 500 | 475 | 375 | 315 | 300 | 500 | 475 | 450 | 475 | 500 | 500 | 500 | 500 | 200 | 100 |
| **4 500 000** | 315 | 200 | 300 | 425 | 475 | 400 | 265 | 180 | 160 | 475 | 400 | 375 | 400 | 200 | 125 | 140 | 300 | 160 | 60 |
| 4 500 000 | 224 | 300 | 375 | 450 | 475 | 425 | 335 | 280 | 265 | 500 | 425 | 400 | 425 | 500 | 475 | 500 | 500 | 180 | 100 |
| | | max **500** | | | | | | | | | | | | | | | | max **200** | max **100** |

**11**

size **8001**

| | | | | | | | | | | | | | | | | | | | |
|---|---|---|---|---|---|---|---|---|---|---|---|---|---|---|---|---|---|---|---|
| **355 000** | 900 | 630 | 630 | 630 | 630 | 630 | 630 | 630 | 630 | 630 | 530 | 600 | 630 | 630 | 630 | 630 | 630 | 118 | 250 |
| **355 000** | 630 | 630 | 630 | 630 | 630 | 630 | 630 | 630 | 630 | 630 | 630 | 630 | 630 | 630 | 630 | 630 | 630 | 125 | 250 |
| **450 000** | 900 | 630 | 630 | 425 | 400 | 630 | 630 | 630 | 630 | 530 | 425 | 475 | 630 | 630 | 630 | 630 | 630 | 75 | 250 |
| **450 000** | 630 | 630 | 630 | 630 | 630 | 630 | 630 | 630 | 630 | 630 | 630 | 630 | 630 | 630 | 630 | 630 | 630 | 125 | 250 |
| **560 000** | 900 | 630 | 475 | 190 | 170 | 300 | 630 | 630 | 630 | 450 | 355 | 400 | 600 | 630 | 630 | 630 | 630 | 37,5 | 250 |
| **560 000** | 630 | 630 | 630 | 630 | 630 | 630 | 630 | 630 | 630 | 630 | 600 | 630 | 630 | 630 | 630 | 630 | 630 | 125 | 250 |
| **710 000** | 900 | 112 | 630 | – | – | – | 315 | 63 | 56 | 355 | 265 | 315 | 500 | 630 | 630 | 630 | 600 | – | 14 |
| **710 000** | 630 | 630 | 630 | 630 | 630 | 630 | 630 | 630 | 630 | 600 | 530 | 560 | 630 | 630 | 630 | 630 | 630 | 125 | 250 |
| **900 000** | 900 | 630 | 630 | – | – | – | 500 | 400 | 335 | 224 | 170 | 200 | 355 | 630 | 630 | 630 | 450 | – | 67 |
| **900 000** | 630 | 630 | 630 | 630 | 630 | 630 | 630 | 630 | 630 | 530 | 450 | 500 | 630 | 630 | 630 | 630 | 630 | 118 | 250 |
| **900 000** | 450 | 630 | 630 | 630 | 630 | 630 | 630 | 630 | 630 | 630 | 630 | 630 | 630 | 630 | 630 | 630 | 630 | 125 | 250 |
| **1 120 000** | 630 | 630 | 630 | 530 | 500 | 630 | 630 | 630 | 630 | 450 | 375 | 425 | 560 | 630 | 630 | 630 | 630 | 90 | 250 |
| **1 120 000** | 450 | 630 | 630 | 630 | 630 | 630 | 630 | 630 | 630 | 600 | 560 | 600 | 630 | 630 | 630 | 630 | 630 | 125 | 250 |
| **1 400 000** | 630 | 630 | 630 | 355 | 315 | 500 | 630 | 630 | 630 | 375 | 315 | 355 | 500 | 630 | 630 | 630 | 560 | 60 | 250 |
| **1 400 000** | 450 | 630 | 630 | 630 | 630 | 630 | 630 | 630 | 630 | 560 | 500 | 530 | 630 | 630 | 630 | 630 | 630 | 125 | 250 |
| **1 800 000** | 630 | 630 | 355 | 150 | 132 | 236 | 630 | 630 | 630 | 315 | 250 | 280 | 425 | 630 | 630 | 630 | 500 | 28 | 250 |
| **1 800 000** | 450 | 630 | 630 | 630 | 630 | 630 | 630 | 630 | 630 | 475 | 425 | 450 | 560 | 630 | 630 | 630 | 630 | 125 | 250 |
| **2 240 000** | 450 | 630 | 630 | 630 | 600 | 630 | 630 | 630 | 630 | 425 | 375 | 400 | 500 | 630 | 630 | 630 | 560 | 106 | 250 |
| **2 240 000** | 315 | 630 | 630 | 630 | 630 | 630 | 630 | 630 | 630 | 530 | 500 | 530 | 600 | 630 | 630 | 630 | 630 | 125 | 250 |
| **2 800 000** | 450 | 630 | 630 | 500 | 475 | 630 | 630 | 600 | 630 | 375 | 315 | 355 | 450 | 630 | 630 | 630 | 500 | 85 | 250 |
| **2 800 000** | 315 | 630 | 630 | 630 | 630 | 630 | 630 | 630 | 630 | 500 | 450 | 475 | 560 | 630 | 630 | 630 | 600 | 125 | 250 |
| **3 550 000** | 450 | 630 | 630 | 355 | 335 | 500 | 560 | 530 | 560 | 315 | 265 | 300 | 400 | 560 | 630 | 600 | 450 | 60 | 250 |
| **3 550 000** | 315 | 630 | 630 | 630 | 630 | 630 | 600 | 600 | 600 | 450 | 400 | 425 | 500 | 600 | 630 | 630 | 530 | 125 | 250 |
| **4 500 000** | 450 | 630 | 450 | 224 | 200 | 315 | 530 | 475 | 530 | 265 | 224 | 236 | 355 | 500 | 630 | 560 | 400 | 37,5 | 250 |
| 4 500 000 | 315 | 630 | 630 | 630 | 630 | 630 | 560 | 530 | 560 | 400 | 355 | 375 | 450 | 560 | 630 | 600 | 475 | 118 | 250 |
| | | max **630** | | | | | | | | | | | | | | | | max **125** | max **250** |

1) An axial load of up to 0,2 times the value in the table is permissible, simultaneously with the radial load. If exceeded consult us.
2) An unfavorable direction of load can limit $F_{r2}$ to $0{,}71 \cdot F_{r2max}$
3) For radial loads acting simultaneously on both sides of double extension low speed shaft or for hollow low speed shaft, consult us.

2586-01.02

## 11.2 - Axial loads $F_{a2}$ [kN] or radial loads $F_{r2}$ [kN] on low speed shaft end

Radial load on **low speed wheel end**[3)]

size **7101**

| $n_2 \cdot L_h$ | $M_2$ | $F_{r2}$ [1) 2)] | | | | | | | | | | | | | | | | $F_{a2}$ [1)] | |
|---|---|---|---|---|---|---|---|---|---|---|---|---|---|---|---|---|---|---|---|
| | | 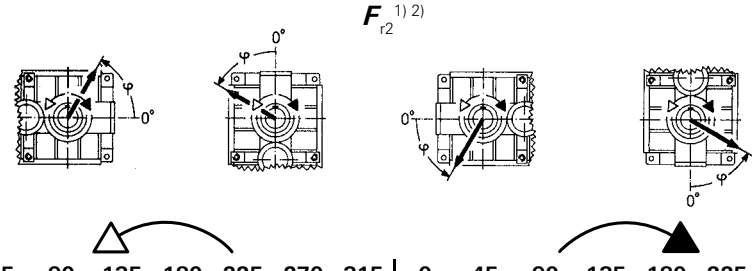 | | | | | | | | | | | | | | | | | |
| min⁻¹·h | kN m | **0** | **45** | **90** | **135** | **180** | **225** | **270** | **315** | **0** | **45** | **90** | **135** | **180** | **225** | **270** | **315** | | |
| **355 000** | 630 | 250 | 500 | 500 | 500 | 500 | 335 | 180 | 170 | 500 | 500 | 500 | 500 | 500 | 500 | 500 | 500 | 200 | 80 |
| **355 000** | 450 | 500 | 500 | 500 | 500 | 500 | 500 | 450 | 425 | 500 | 500 | 500 | 500 | 500 | 500 | 500 | 500 | 200 | 100 |
| **450 000** | 630 | 150 | 500 | 500 | 500 | 500 | 212 | 100 | 90 | 500 | 500 | 500 | 500 | 500 | 500 | 500 | 500 | 200 | 47,5 |
| **450 000** | 450 | 450 | 500 | 500 | 500 | 500 | 500 | 375 | 355 | 500 | 500 | 500 | 500 | 500 | 500 | 500 | 500 | 200 | 100 |
| **560 000** | 630 | 47,5 | 355 | 500 | 500 | 500 | 80 | 28 | 26,5 | 500 | 500 | 450 | 500 | 500 | 500 | 500 | 500 | 200 | 17 |
| **560 000** | 450 | 400 | 500 | 500 | 500 | 500 | 450 | 315 | 280 | 500 | 500 | 500 | 500 | 500 | 500 | 500 | 500 | 200 | 100 |
| **710 000** | 630 | – | 150 | 47,5 | 42,5 | 95 | – | – | – | 500 | 425 | 400 | 500 | 500 | 500 | 500 | 500 | 26,5 | – |
| **710 000** | 450 | 315 | 500 | 500 | 500 | 500 | 375 | 236 | 224 | 500 | 500 | 500 | 500 | 500 | 500 | 500 | 500 | 200 | 100 |
| **900 000** | 630 | – | 160 | 160 | 132 | 315 | – | – | – | 500 | 375 | 335 | 425 | 375 | 280 | 315 | 500 | 67 | – |
| **900 000** | 450 | 236 | 500 | 500 | 500 | 500 | 300 | 180 | 160 | 500 | 500 | 475 | 500 | 500 | 500 | 500 | 500 | 200 | 80 |
| **900 000** | 315 | 450 | 500 | 500 | 500 | 500 | 500 | 375 | 355 | 500 | 500 | 500 | 500 | 500 | 500 | 500 | 500 | 200 | 100 |
| **1 120 000** | 450 | 170 | 425 | 500 | 500 | 500 | 224 | 125 | 112 | 500 | 450 | 425 | 500 | 500 | 500 | 500 | 500 | 200 | 56 |
| **1 120 000** | 315 | 400 | 500 | 500 | 500 | 500 | 450 | 315 | 315 | 500 | 500 | 500 | 500 | 500 | 500 | 500 | 500 | 200 | 100 |
| **1 400 000** | 450 | 100 | 355 | 500 | 500 | 500 | 150 | 67 | 63 | 500 | 400 | 375 | 450 | 500 | 500 | 500 | 500 | 200 | 31,5 |
| **1 400 000** | 315 | 335 | 500 | 500 | 500 | 500 | 400 | 280 | 265 | 500 | 500 | 475 | 500 | 500 | 500 | 500 | 500 | 200 | 100 |
| **1 800 000** | 450 | 17 | 224 | 500 | 500 | 425 | 30 | 10 | 9 | 500 | 355 | 315 | 400 | 500 | 475 | 500 | 500 | 200 | 6 |
| **1 800 000** | 315 | 280 | 475 | 500 | 500 | 500 | 335 | 224 | 212 | 500 | 450 | 425 | 475 | 500 | 500 | 500 | 500 | 200 | 100 |
| **2 240 000** | 315 | 224 | 425 | 500 | 500 | 500 | 280 | 180 | 160 | 500 | 400 | 375 | 450 | 500 | 500 | 500 | 500 | 200 | 80 |
| **2 240 000** | 224 | 355 | 500 | 500 | 500 | 500 | 400 | 315 | 300 | 500 | 475 | 450 | 500 | 500 | 500 | 500 | 500 | 200 | 100 |
| **2 800 000** | 315 | 180 | 355 | 500 | 500 | 450 | 224 | 132 | 125 | 475 | 355 | 335 | 400 | 500 | 500 | 500 | 500 | 200 | 60 |
| **2 800 000** | 224 | 315 | 450 | 500 | 500 | 500 | 355 | 265 | 250 | 500 | 425 | 400 | 450 | 500 | 500 | 500 | 500 | 200 | 100 |
| **3 550 000** | 315 | 125 | 315 | 500 | 500 | 400 | 170 | 90 | 85 | 450 | 315 | 300 | 355 | 500 | 500 | 500 | 500 | 200 | 42,5 |
| **3 550 000** | 224 | 280 | 400 | 500 | 500 | 475 | 315 | 224 | 212 | 475 | 400 | 375 | 425 | 500 | 500 | 500 | 500 | 200 | 100 |
| **4 500 000** | 315 | 75 | 250 | 500 | 500 | 355 | 112 | 50 | 47,5 | 400 | 280 | 265 | 315 | 475 | 425 | 475 | 500 | 190 | 23,6 |
| 4 500 000 | 224 | 236 | 375 | 500 | 500 | 425 | 265 | 190 | 180 | 450 | 355 | 335 | 375 | 500 | 500 | 500 | 500 | 200 | 85 |
| max **500** | | | | | | | | | | | | | | | | | | max **200** | max **100** |

size **8001**

| | | | | | | | | | | | | | | | | | | | |
|---|---|---|---|---|---|---|---|---|---|---|---|---|---|---|---|---|---|---|---|
| **355 000** | 900 | 630 | 630 | 630 | 630 | 630 | 630 | 630 | 630 | 355 | 250 | 265 | 475 | 630 | 630 | 630 | 630 | 125 | 250 |
| **355 000** | 630 | 630 | 630 | 630 | 630 | 630 | 630 | 630 | 630 | 630 | 600 | 630 | 630 | 630 | 630 | 630 | 630 | 125 | 250 |
| **450 000** | 900 | 630 | 630 | 630 | 630 | 630 | 630 | 630 | 630 | 236 | 150 | 160 | 335 | 630 | 630 | 630 | 630 | 125 | 250 |
| **450 000** | 630 | 630 | 630 | 630 | 630 | 630 | 630 | 630 | 630 | 630 | 500 | 530 | 630 | 630 | 630 | 630 | 630 | 125 | 250 |
| **560 000** | 900 | 630 | 630 | 630 | 630 | 630 | 630 | 600 | 630 | 112 | 63 | 71 | 170 | 630 | 630 | 630 | 530 | 125 | 250 |
| **560 000** | 630 | 630 | 630 | 630 | 630 | 630 | 630 | 630 | 630 | 530 | 425 | 450 | 630 | 630 | 630 | 630 | 630 | 125 | 250 |
| **710 000** | 900 | 630 | 630 | 630 | 630 | 630 | 630 | 530 | 560 | – | – | – | – | 40 | 20 | 23,6 | 118 | 90 | 250 |
| **710 000** | 630 | 630 | 630 | 630 | 630 | 630 | 630 | 630 | 630 | 450 | 335 | 355 | 530 | 630 | 630 | 630 | 630 | 125 | 250 |
| **900 000** | 900 | 630 | 630 | 530 | 450 | 600 | 560 | 450 | 500 | – | – | – | – | 355 | 125 | 150 | 200 | 53 | 250 |
| **900 000** | 630 | 630 | 630 | 630 | 630 | 630 | 630 | 630 | 630 | 355 | 250 | 265 | 450 | 630 | 630 | 630 | 630 | 125 | 250 |
| **900 000** | 450 | 630 | 630 | 630 | 630 | 630 | 630 | 630 | 630 | 600 | 475 | 500 | 630 | 630 | 630 | 630 | 630 | 125 | 250 |
| **1 120 000** | 630 | 630 | 630 | 630 | 630 | 630 | 630 | 560 | 600 | 265 | 180 | 200 | 355 | 630 | 630 | 630 | 600 | 125 | 250 |
| **1 120 000** | 450 | 630 | 630 | 630 | 630 | 630 | 630 | 630 | 630 | 530 | 425 | 425 | 600 | 630 | 630 | 630 | 630 | 125 | 250 |
| **1 400 000** | 630 | 630 | 630 | 630 | 630 | 630 | 600 | 500 | 530 | 190 | 118 | 132 | 250 | 630 | 630 | 630 | 500 | 125 | 250 |
| **1 400 000** | 450 | 630 | 630 | 630 | 630 | 630 | 630 | 630 | 630 | 450 | 355 | 375 | 530 | 630 | 630 | 630 | 630 | 125 | 250 |
| **1 800 000** | 630 | 630 | 630 | 630 | 630 | 630 | 530 | 425 | 475 | 85 | 50 | 56 | 132 | 600 | 630 | 630 | 375 | 90 | 250 |
| **1 800 000** | 450 | 630 | 630 | 630 | 630 | 630 | 630 | 560 | 600 | 375 | 280 | 300 | 450 | 630 | 630 | 630 | 600 | 125 | 250 |
| **2 240 000** | 450 | 630 | 630 | 630 | 630 | 630 | 560 | 500 | 530 | 315 | 224 | 250 | 375 | 630 | 630 | 630 | 560 | 125 | 250 |
| **2 240 000** | 315 | 630 | 630 | 630 | 630 | 630 | 630 | 600 | 600 | 475 | 400 | 425 | 530 | 630 | 630 | 630 | 630 | 125 | 250 |
| **2 800 000** | 450 | 630 | 630 | 630 | 630 | 630 | 530 | 450 | 475 | 250 | 180 | 190 | 315 | 600 | 630 | 630 | 475 | 125 | 250 |
| **2 800 000** | 315 | 630 | 630 | 630 | 630 | 630 | 600 | 530 | 560 | 425 | 355 | 355 | 475 | 630 | 630 | 630 | 600 | 125 | 250 |
| **3 550 000** | 450 | 560 | 630 | 630 | 630 | 630 | 475 | 400 | 425 | 180 | 125 | 132 | 236 | 530 | 630 | 630 | 425 | 106 | 236 |
| **3 550 000** | 315 | 630 | 630 | 630 | 630 | 630 | 560 | 475 | 500 | 375 | 300 | 315 | 425 | 630 | 630 | 630 | 530 | 125 | 250 |
| **4 500 000** | 450 | 530 | 630 | 630 | 600 | 630 | 425 | 335 | 375 | 118 | 75 | 85 | 170 | 475 | 630 | 630 | 335 | 85 | 212 |
| 4 500 000 | 315 | 560 | 630 | 630 | 630 | 630 | 500 | 425 | 475 | 315 | 250 | 265 | 375 | 560 | 630 | 630 | 500 | 125 | 236 |
| max **630** | | | | | | | | | | | | | | | | | | max **125** | max **250** |

1) An axial load of up to 0,2 times the value in the table is permissible, simultaneously with the radial load. If exceeded consult us.
2) An unfavorable direction of load can limit $F_{r2}$ to 0,71 · $F_{r2max}$
3) For radial loads acting simultaneously on both sides of double extension low speed shaft or for hollow low speed shaft, consult us.

Page intentionally left blank

# 12 - Accessories and non-standard designs


(1) Hollow low speed shaft with shrink disc ..... 104
(2) Hollow low speed shaft with keyway (sizes 4000 ... 6301) ..... 106
(3) Hollow low speed shaft washer ..... 107
(4) Backstop device ..... 108
(5) Reaction bolt using disc springs (sizes 4000 ... 6301) ..... 109
(6) Fan cooling ..... 110
(7) Water cooling by coil (sizes 4000 ... 6301) ..... 111
(8) Independent cooling unit ..... 112
(9) Forced bearing lubrication ..... 114
(10) Oil heater ..... 114
(11) Special painting cycles ..... 115
(12) High and low speed shaft seals ..... 116
(13) Desiccant breather ..... 117
(14) Oil level plug with dip stick ..... 117
(15) Oil drain tap ..... 118
(16) Oil temperature probe ..... 118
(17) Oil temperature probe with terminal box and ammetric transducer 4 ÷ 20 mA ..... 119
(18) Bearing temperature probe ..... 120
(19) Bearing temperature probe with terminal box and ammetric transducer 4 – 20 m ..... 121
(20) Bi-metal type thermostat ..... 121
(21) Oil level switch with float ..... 122
(22) Oil optical probe ..... 122
(24) Remote temperature indicator instrument with set point ..... 122
– Various ..... 123


**ATTENTION**. The simultaneous presence on the same gear reducer of two or more accessories or non-standard designs is not always possible: consult us for verification.



2586-01.02

## (1) Hollow low speed shaft with shrink disc

### Opposite side to machine

**Stepped** hollow low speed shaft with shrink disc on **machine opposite side**; this design **facilitates** installation and removal and **affords a notable increase in rigidity** of keying and resistance to bending and torsional-stresses at the shaft end of driven machine.

**Safety** guards made of steel for shrink disc, supplied **as standard**.

**IMPORTANT**. The shoulder diameter of the driven machine shaft end abutting with the gear reducer must be at least (1,12 – 1,18) · D (with stepped hollow shaft (1,18 – 1,25) · D).

Possible gear reducer designs are given at ch. 7 and 9.

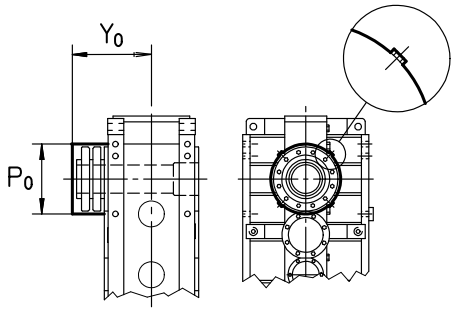


4000 ... 5601
7101, 8001

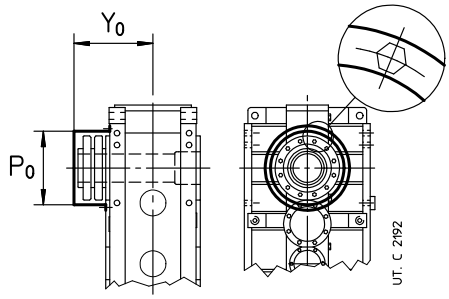


6300, 6301

| Gear reducer size | $P_0$ Ø | $Y_0$ |
|---|---|---|
| **4000, 4001** | 449 | 522 |
| **4500, 4501** | 479 | 534 |
| **5000, 5001** | 536 | 635 |
| **5600, 5601** | 608 | 659 |
| **6300, 6301** | 750 | 752 |
| **7101** | 850 | 990 |
| **8001** | 977 | 1127 |

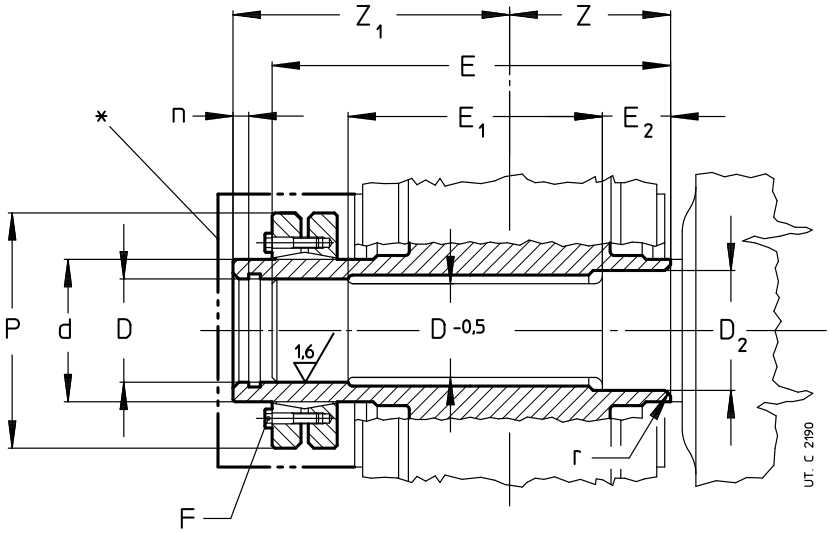


| Gear reducer size | D Ø H7 / h6, j6 | $D_2$** Ø H7 / h6, j6 | E | $E_1$ | $E_2$ | $E_2$ 1) | F 2) | $M_S$ 3) N m | n | d Ø | P Ø | r | Z | $Z_1$ | $M_{2SD}$ 4) kN m | Δm kg |
|---|---|---|---|---|---|---|---|---|---|---|---|---|---|---|---|---|
| **4000, 4001** | 210 | 220 | 788 | 480 | 165 | 130 | M20 n. 14 | 490 | 14 | 260 | 430 | 5 | 330 | 497 | 254 | -70 |
| **4500, 4501** | 230 | 240 | 799 | 465 | 180 | 130 | M20 n. 16 | 490 | 14 | 280 | 460 | 5 | 330 | 508 | 327 | -140 |
| **5000, 5001** | 260 | 270 | 970 | 600 | 200 | 165 | M20 n. 20 | 490 | 16 | 320 | 520 | 6 | 410 | 605 | 457 | -160 |
| **5600, 5601** | 290 | 300 | 992 | 572 | 225 | 180 | M20 n. 24 | 490 | 16 | 360 | 590 | 6 | 410 | 627 | 606 | -270 |
| **6300, 6301** | 325 | 335 | 1 110 | 650 | 250 | 200 | M24 n. 21 | 840 | 18 | 400 | 660 | 7 | 460 | 700 | 872 | -410 |
| **7101** | 360 | 370 | 1 394 | 782 | 280 | 225 | M27 n.28 | 1 250 | 20 | 460 | 770 | 7 | 551 | 899 | 1 650 | -440 |
| **8001** | 400 | 410 | 1 606 | 886 | 315 | 250 | M27 n. 34 | 1 250 | 20 | 530 | 910 | 8 | 626 | 1036 | 2 120 | -360 |

1) Values valid for **R 4I**.
2) Screws UNI 5737-88 class 10.9
3) Screw tightening torque.
4) Maximum torque value transmissible by shrink disc.
5) In presence of «Labyrinth seal and low speed shaft greaser» (ch. 12.(12), it is necessary to increase E dimension ($E_2$) by the A quantity stated in the table at ch. 12.(12).

* Protection for hollow low speed shaft with shrink disc, as standard.

** Each hollow shaft type (standard, stepped, with shrink disc) has a slightly oversized diameter **D** at the input to facilitate the assembly of gear reducer on machine shaft end: this, however, does not affect the connection reliability.

Supplementary description when ordering by **designation: hollow low speed shaft with shrink disc, on machine opposite side.**

**Side to machine**

Stepped hollow low speed shaft with shrink disc on **machine side** (interposed between gear reducer and machine); this design **facilitates** installation and removal and **affords** a notable increase in rigidity of keying, **reduces** the deformations of machine shaft end, **avoiding** the necessity of safety guards on the unit itself. Moreover, since deformability of keying area is greater ($d - D_2 < d - D$) and friction area acts on a greater diameter ($D_2 > D$), maximum transmissible torque increases by 18 – 25% compared to the solution with shrink disc on opposite side to machine.

For the shaft end of driven machine on which gear reducer stepped hollow low speed shaft must be keyed, it is possible to adopt both «long» and «short» shaft end of driven machine: dimensions as per table.

In the first case (fig. a), where the «long» shaft end of driven machine acts as a guide, mounting operations are facilitated.

In the second case (fig. b), the reduced axial dimension of the «short» shaft end of driven machine, limits the mounting and removing overall dimensions at the very least (consult us).

In both cases the rigidity and the resistance to bending and torsional stresses at the shaft and of driven machine do not change, since the only surface through which torque transmission occurs is the $D_2$ one.

**IMPORTANT.** The shoulder diameter of the driven machine shaft end abutting with the gear reducer must be at least (1,18 – 1,25) · D.

Possible gear reducer designs are given at ch. 8 and 10.

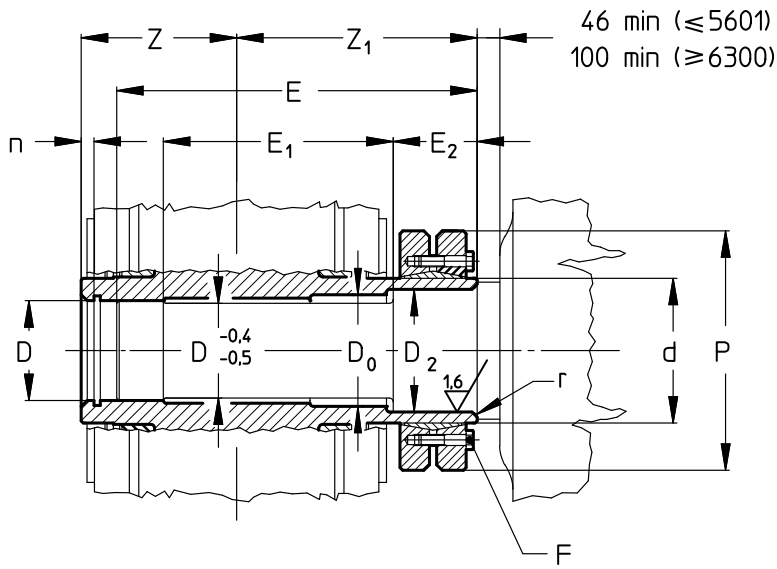


(a)
Stepped hollow low speed shaft with locking assembly and «long» machine shaft end

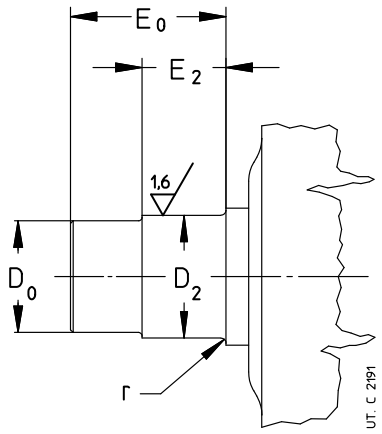


(b)
«Short» shaft end of driven machine (excluding sizes 7101, 8001)

| Gear reducer size | D Ø H7 / h6, j6 | D2** Ø H7 / h6, j6 | D0 Ø | E | E0 | E1 | E2 | E2 1) | F 2) | $M_S$ 3) N m | n | d Ø | P Ø | r | Z | Z1 | $M_{2SD}$ 4) kN m | Δm kg |
|---|---|---|---|---|---|---|---|---|---|---|---|---|---|---|---|---|---|---|
| **4000, 4001** | 210 | 220 | 215 | 754 | 307 | 446 | 165 | 130 | M20 n. 14 | 490 | 14 | 260 | 430 | 5 | 330 | 463 | 285 | -80 |
| **4500, 4501** | 230 | 240 | 232 | 768 | 342 | 434 | 180 | 130 | M20 n. 14 | 490 | 14 | 280 | 460 | 5 | 330 | 477 | 363 | -150 |
| **5000, 5001** | 260 | 270 | 265 | 935 | 380 | 565 | 200 | 165 | M20 n. 16 | 490 | 16 | 320 | 520 | 6 | 410 | 570 | 501 | -190 |
| **5600, 5601** | 290 | 300 | 295 | 958 | 428 | 538 | 225 | 180 | M20 n. 16 | 490 | 16 | 360 | 590 | 6 | 410 | 593 | 658 | -300 |
| **6300, 6301** | 325 | 335 | 330 | 1 063 | 475 | 603 | 250 | 200 | M24 n. 18 | 840 | 18 | 400 | 660 | 7 | 460 | 653 | 938 | -460 |
| **7101** | 360 | 370 | – | 1 335 | – | 774 | 327 | 327 | M27 n. 28 | 1 250 | 20 | 460 | 770 | 7 | 551 | 840 | 1 700 | -460 |
| **8001** | 400 | 410 | – | 1 548 | – | 879 | 400 | 400 | M27 n. 34 | 1 250 | 20 | 530 | 910 | 8 | 626 | 978 | 2 160 | -400 |

1) Values valid for **R 4I**.
2) Screws UNI 5737-88 class 10.9.
3) Screw tightening torque.
4) Maximum torque value transmissible by shrink disc.
** Each hollow shaft type (standard, stepped, with shrink disc) has a slightly oversized diameter **D** at the input to facilitate the assembly of gear reducer on machine shaft end: this, however, does not affect the connection reliability.

Supplementary description when ordering by **designation: hollow low speed shaft with shrink disc, on machine side.**

### (2) Hollow low speed shaft with keyway (sizes 4000 ... 6301)

Hollow low speed shaft, normal (fig. a) or stepped (fig. b), with keyway. With required torque higher than table values, two keyways at 120° are necessary.

**Safety guards** made of steel on the area not used by hollow low speed shaft with keyway, supplied **as standard**. The safety guard is to be mounted on low speed wheel side (wheel opposite side for R 4I; see also ch. 8 and 10).

Hollow low speed shaft washer (see ch. 12 (5), available on request.

**Important**: the shoulder diameter of the driven machine shaft end abutting with the gear reducer must be at least (1,12 ÷ 1,18) · D (with stepped hollow shaft (1,18 ÷ 1,25) · D).

Design not possible for sizes 7101 and 8001.

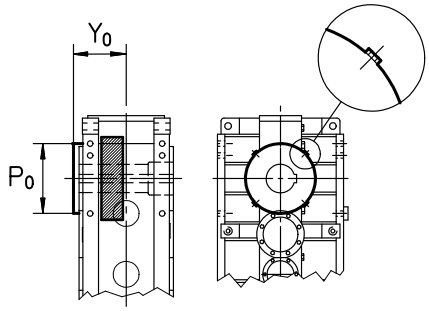


4000 .... 5601

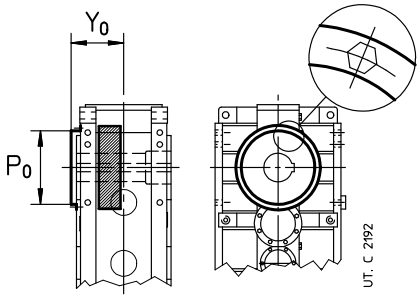


6300, 6301

| Gear reducer size | $P_0$ Ø | $Y_0$ ≈ |
|---|---|---|
| **4000, 4001** | 437 | 359 |
| **4500, 4501** | 479 | 362 |
| **5000, 5001** | 536 | 445 |
| **5600, 5601** | 598 | 445 |
| **6300, 6301** | 657 | 620 |

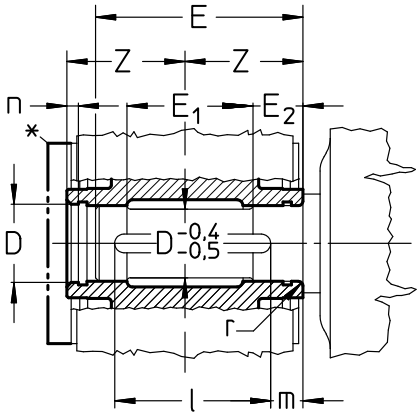


(a)
Hollow low speed shaft
with keyway

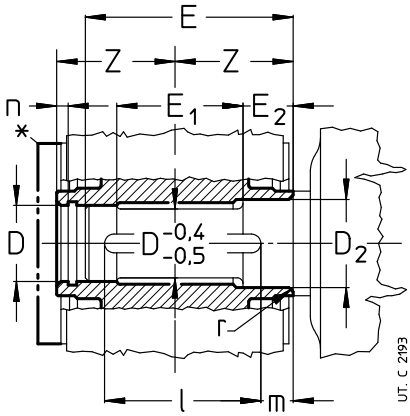


(b)
Stepped hollow low speed shaft
with keyway

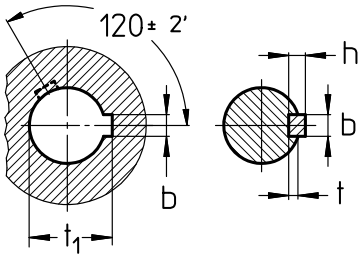


| Gear reducer size | Hollow shaft | | | | Shaft end of driven machine | | | | | | Parallel key | Keyway | | | $M_2$ | Δm |
|---|---|---|---|---|---|---|---|---|---|---|---|---|---|---|---|---|
| | **D**** | **$D_2$**** | **n** | **Z** | **E** | **$E_1$** | **$E_2$** | | **m** | **r** | **b × h × l** | **b** | **t** | **$t_1$** | | |
| | Ø | Ø | | | 3) | | 3) | 1) 3) | | | h9 h11 | $H9_{hub}$ | | | 2) | |
| | H7 / h6, j6 | | | | | | | | | | | $N9_{shaft}$ | shaft | hub | kN m | kg |
| **4000, 4001** | 200 | 210 | 14 | 330 | 620 | 300 | 165 | 130 | 10 | 5 | 45 × 25 × 600 | 45 | 15 | 210,4 | **112** | -150 |
| **4500, 4501** | 220 | 230 | 14 | 330 | 620 | 300 | 180 | 130 | 10 | 5 | 50 × 28 × 600 | 50 | 17 | 231,4 | **140** | -240 |
| **5000, 5001** | 250 | 260 | 16 | 410 | 775 | 400 | 200 | 165 | 13 | 6 | 56 × 32 × 750 | 56 | 20 | 262,4 | **224** | -300 |
| **5600, 5601** | 280 | 290 | 16 | 410 | 775 | 400 | 225 | 180 | 13 | 6 | 63 × 32 × 750 | 63 | 20 | 292,4 | **250** | -420 |
| **6300, 6301** | 310 | 320 | 18 | 460 | 870 | 400 | 250 | 200 | 15 | 7 | 70 × 36 × 840 | 70 | 22 | 324,4 | **355** | -670 |

1) Values valid for **R 4I**.
2) Value of transmissible torque with keyway. For higher values, two keyways at 120° are necessary.
3) In presence of «Labyrinth seal and low speed shaft greaser» (ch. 12.(12)), it is necessary to increase E dimension ($E_2$) by the A quantity stated in the table at ch. 12.(12).
* Hollow low speed shaft protection with keyway, as standard.
** Each hollow shaft type (standard, stepped, with shrink disc) has a slightly oversized diameter **D** at the input to facilitate the assembly of gear reducer on machine shaft end: this, however, does not affect the connection reliability.

Supplementary description when ordering by **designation**: **hollow low speed shaft with keyway, hollow low speed shaft with two keyways**, **stepped hollow low speed shaft with keyway**, **stepped hollow low speed shaft with two keyways.**

### (3) Hollow low speed shaft washer

Washer, retaining ring and screw for axial fastening of gear reducer with hollow low speed shaft with shrink disc or with keyway.

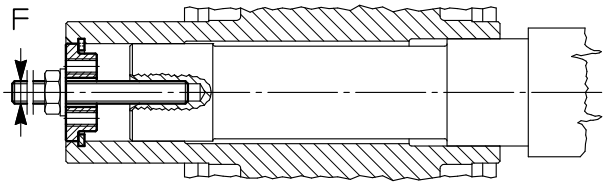


installing

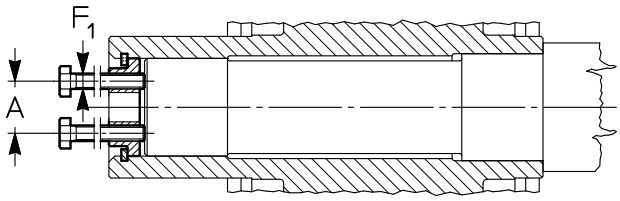


removing

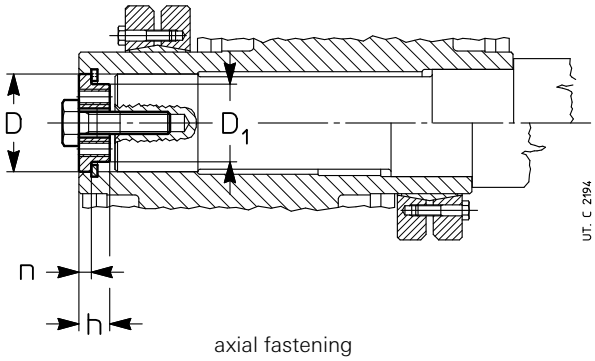


axial fastening

| Grandezza riduttore | A | | D | | $D_1$ | | F | $F_1$ | h | n | Vite fissaggio assiale UNI 5737-88 |
|---|---|---|---|---|---|---|---|---|---|---|---|
| | | 1) | Ø | Ø 1) | Ø | 1) | | | | | |
| **4000, 4001** | 144 | 134 | 210 | 200 | 180 | 170 | M30 | M24 | 34 | 14 | M30 × 90 |
| **4500, 4501** | 164 | 144 | 230 | 220 | 200 | 190 | M30 | M24 | 34 | 14 | M30 × 90 |
| **5000, 5001** | 178 | 168 | 260 | 250 | 225 | 215 | M36 | M30 | 40 | 16 | M36 × 110 |
| **5600, 5601** | 208 | 198 | 290 | 280 | 255 | 245 | M36 | M30 | 40 | 16 | M36 × 110 |
| **6300, 6301** | 228 | 218 | 325 | 310 | 285 | 270 | M36 | M30 | 45 | 18 | M36 × 110 |
| **7101** | 228 | – | 360 | – | 319 | – | M45 | M36 | 50 | 20 | M45 × 150 |
| **8001** | 268 | – | 400 | – | 359 | – | M45 | M36 | 50 | 20 | M45 × 150 |

1) Dimension valid for design with hollow low speed shaft with keyway.

Supplementary description when ordering by **designation**: **hollow low speed shaft washer with shrink disc** or **hollow low speed shaft washer with keyway**.

### (4) Backstop device

Backstop device (with centrifugal disjunction for size ⩾ 5000) available for helical gear reducers with $i_N$ ⩾ **12,5** ($i_N$ ⩾ **14** for sizes 4500, 4501) and bevel helical gear reducers with $i_N$ ⩾ **12,5** ($i_N$ ⩾ **14** for sizes 4500, 4501). The maximum overload capacity of device is equal to **2** · $M_{2BS}$ (see table).

Possible configurations and designs are stated in the following figures.

**R 2I**

| R 2I | X Ø | Y Ø |
|---|---|---|
| **4000, 4001** | 248 | 13 |
| **4500, 4501** | 248 | -15 |
| **5000, 5001** | 320 | 15 |
| **5600, 5601** | 320 | -20 |
| **6300, 6301** | 378 | -19 |
| **7101** | 460 | 144 |
| **8001** | 460 | 167 |

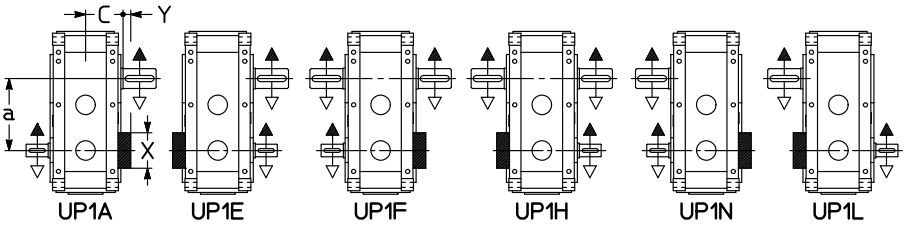


**R 3I**[1)]

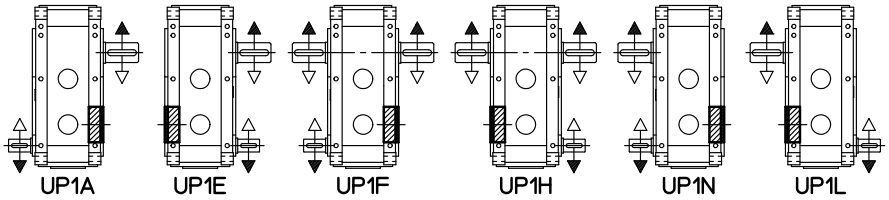


**R 4I**[1)]

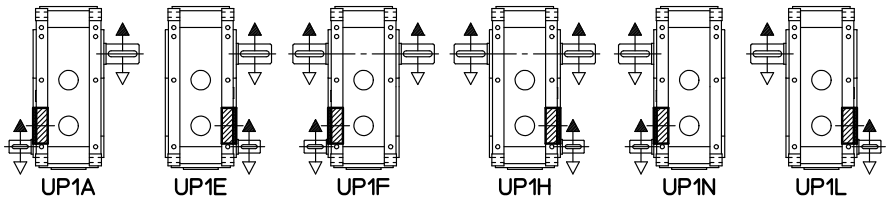


**R CI**

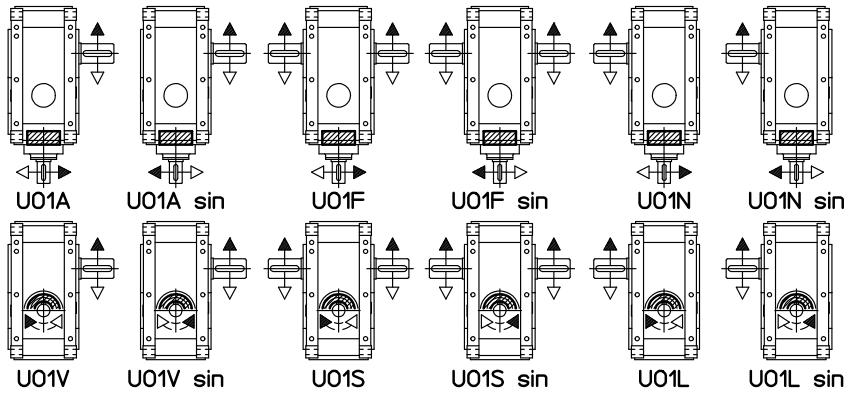


**R C2I**[1)], **R C3I**[1) 2)]

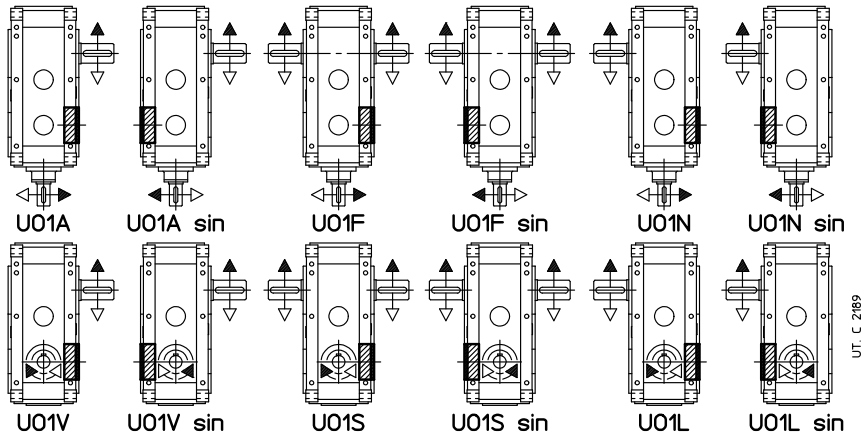


1) Backstop device does not project from dimension **C**.
2) Designs UO1V ... UO1L sin not possible for train of gears C3I.

**Backstop device load capacity**

Low speed shaft nominal torque of backstop device when this is lower than $M_{N2}$ of gear reducer (see ch. 7, 9). Maximum permissible overload equal to **1,7 · $M_{2BS}$**.

| Rotismo | $i_N$ | $M_{2BS}$ [kN m] | | | | | |
|---|---|---|---|---|---|---|---|
| | | **4001** | **4501** | **5001** | **5601** | **6301** | **7101** |
| **3I** | 25 | 95 | – | – | – | – | 630 |
| | 28 | 112 | 112 | 224 | 224 | 335 | – |
| | 31,5 | – | 125 | – | 250 | 375 | – |
| | 35,5 | 112 | 140 | 224 | 280 | 335 | – |
| | 40 | – | 125 | – | – | 375 | – |
| | 45 | – | 140 | – | 280 | – | – |
| **4I** | ⩽ 250 | – | 140 | – | 280 | – | – |
| **C2I** | 20 | 95 | – | – | – | – | – |
| | 22,4 | 112 | 112 | 224 | – | – | – |
| | 25 | – | 125 | – | 250 | – | – |
| | 28 | 112 | 140 | 224 | – | – | – |
| | 31,5 | – | 125 | – | 250 | – | – |
| | 35,5 | – | 140 | – | 280 | – | – |

Supplementary description when ordering by **designation**: **backstop device, white or black arrow free-rotation**.

**(5) Reaction bolt using disc springs** (sizes 4000 ... 6301)

Reaction bolt using disc springs with fork for shaft mounting of motor - coupling - gear reducer group (see ch. 13); available also the only reaction bolt using disc springs: consult us.

Design not possible for sizes 7101 and 8001.

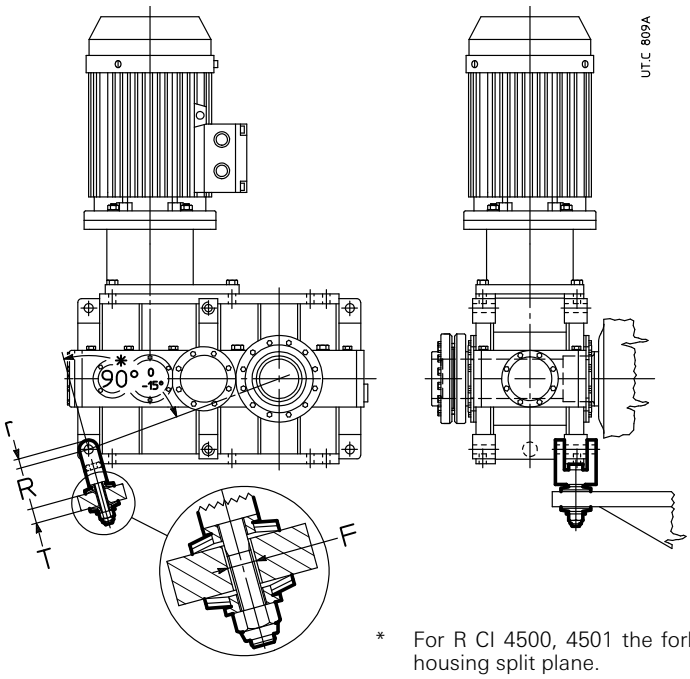


* For R CI 4500, 4501 the fork axes is perpendicular to the housing split plane.

| Gear reducer size | Screw UNI 5737-88 | Disc spring DIN 2093 | T | F Ø | R | r |
|---|---|---|---|---|---|---|
| **4000 ... 4501** | M45 × 260 | A 125 n. 2 | 55 | 50 | 211 | 50 |
| **5000 ... 5601** | M56 × 300 | A 160 n. 2 | 70 | 62 | 274 | 60 |
| **6300, 6301** | M56 × 300 | A 160 n. 3 | 70 | 62 | 284 | 60 |

Supplementary description when ordering by **designation**: **reaction bolt using disc springs and fork**.

### (6) Fan cooling

The **helical** gear reducers **R 2I 4000 ... 5601** and **R 3I 4000 ... 6301** can be supplied with **one** or **two** cooling fans keyed on high speed shafts. For dimensions **e**, and **c** see ch. 8.

For sizes 7101 and 8001, consult us.

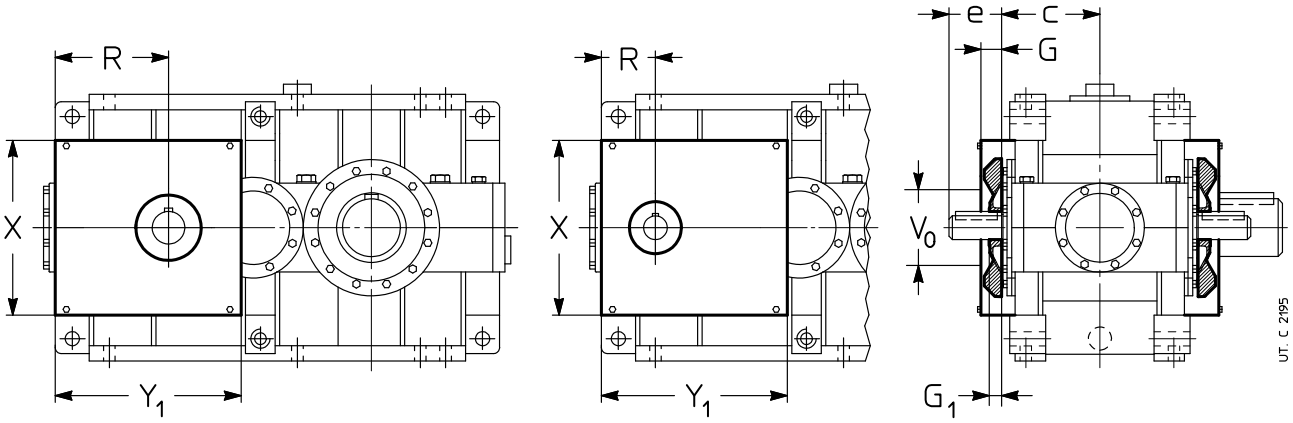


**R 2I** **R 3I**

| Gear reducer size | 2I | | | | 3I | | | | |
|---|---|---|---|---|---|---|---|---|---|
| | **G** 1) | **$G_1$** 2) | **R** | **$V_0$** Ø | **$G_1$** 2) | **R** | **$V_0$** Ø | **X** | **$Y_1$** |
| **4000 ... 4501** | 63 | 50 | 363 | 220 | 40 | 163 | 175 | 590 | 633 |
| **5000 ... 5601** | 75 | 50 | 453 | 290 | 50 | 203 | 220 | 740 | 795 |
| **6300, 6301** | 75 | – | – | – | 50 | 203 | 220 | 880 | 980 |

1) Bolts projecting 6 mm from **G** dimension.
2) The high speed shaft end length is equal to **e - $G_1$**.

The **bevel helical** gear reducers of size and train of gears **stated in the table** can be supplied fitted with **one** fan keyed on the high speed shaft. For dimensions **e** and **c** see ch. 10.

For sizes 7101 and 8001, consult us.



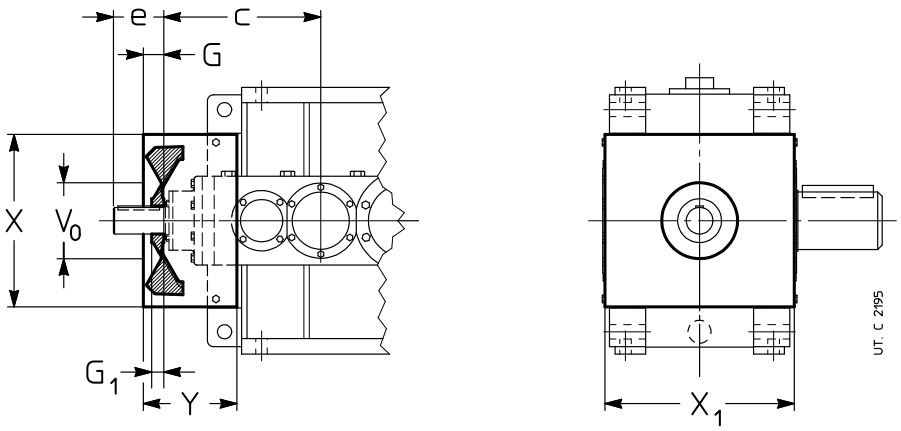


| Gear reducer size | | | G | $G_1$ | $V_0$ Ø | X | $X_1$ | Y |
|---|---|---|---|---|---|---|---|---|
| **CI** | **4000 ... 4501** | | 80 | 40 | 280 | 590 | 640 | 345 |
| **C2I** | **4000 ... 4501** | | 72 | 47 | 220 | 590 | 640 | 310 |
| | **5000 ... 5601** | | 80 | 40 | 290 | 740 | 800 | 380 |
| | **6300, 6301** | | 80 | 40 | 290 | 880 | 872 | 330 |
| **C3I** | **6300, 6301** | $i_N$ = 160 | 57 | 32 | 220 | 880 | 872 | 380 |

1) Bolts projecting 6 mm from dimension **$X_1$** each side.
2) The high speed shaft end length is equal to **e - $G_1$**.

2586-01.02

With double extension high speed shaft designs both extensions are **accessible** even with fan: personnel safety-guards are the Buyer's responsibility (2006/42/EEC).

The possible designs and the position of fans are shown below.

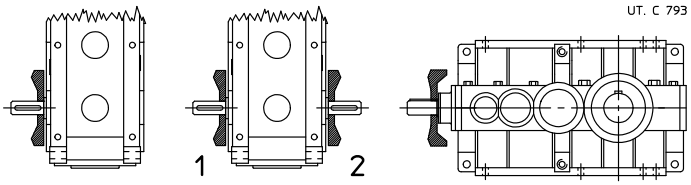


Temperature of cooling air must not exceed ambient temperature.

Also available independent cooling unit with heat exchanger (see ch. 12 (10)); consult us for verification.

Supplementary description when ordering by **designation**: **fan cooling**; in designs with double extension high speed shaft state – only for helical gear reducers – if pos. **1** or **2** or **... with 2 fans**

**(7) Water cooling by coil** (sizes 4000 ... 6301)

Coil made of copper alloy for gear reducer water cooling. On request, available also stainless steel coil (AISI 316) or cupro-nickel, consult us.

Design not possible for vertical mounting positions (V5, V6) with low speed shaft wheel positioned on the bottom.

Design not possible for sizes 7101 and 8001.

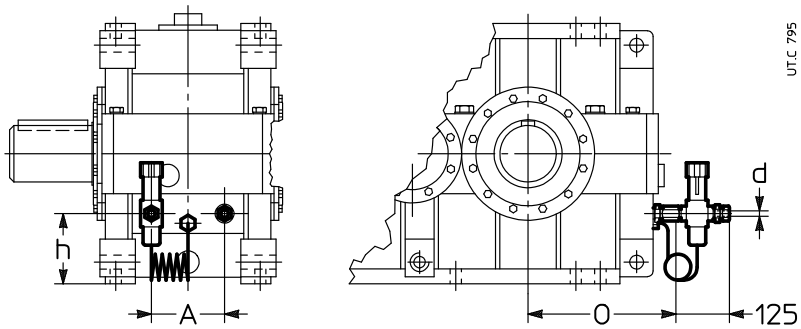


UT.C 795

| Gear reducer size | A | d Ø | h | O |
|---|---|---|---|---|
| **4000 ... 4501** | 180 | 16 | 250 | 472 |
| **5000 ... 5601** | 225 | 16 | 310 | 577 |
| **6300, 6301** | 280 | 16 | 320 | 647 |

12

Cooling water specifications:
- be not too hard;
- be at max temperature 20 °C;
- capacity 10 – 20 dm³/min;
- pressure 0,2 – 0,4 MPa (2 – 4 bar).

A polished metallic pipe (with external diameter **d** stated on table) is sufficient for the connection.

The load loss of coil, according to capacity and water pressure, is approximately 0,6 – 0,8 bar.

On request **thermostatic valve** which, automatically and without auxiliary supply need, permits water circulation when gear reducer oil reaches the set temperature; the valve sensor is equipped with immersion bulb. Mounting and setting, adjustable within 50 – 90 °C, are Buyer's responsibility.

For ambient temperature lower than 0 °C consult us.

Supplementary description when ordering by **designation**: **water cooling by coil** or **water cooling by coil and thermostatic valve**.

### (8) Independent cooling unit

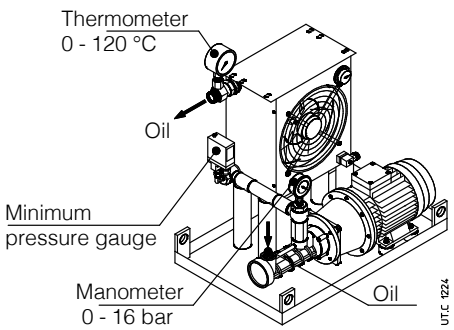


**Oil/Air**

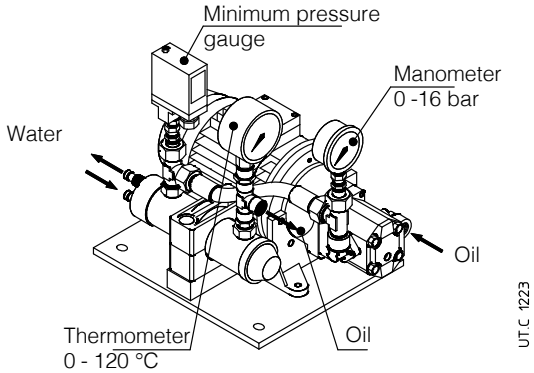


**Oil/Water**

Additional cooling device in the event that the other forced cooling systems are not sufficient anymore for the dissipation of thermal power produced by gear reducer during operation (see ch. 4).

Including:

– one **oil/air heat exchanger** (O/A; with thermostat and adjustable control knob 0 – 90 °C) or **oil/water heat exchanger** (O/W),
– one **motor pump**: screw pump with fluoro rubber seals (gear pump for UR O/W4 – UR O/W 21); 4 pole motor B3/B5 (three-phase Δ230 Y400 V 50 Hz); motor-pump connection with coupling;
– one **motor fan** (O/A) (three-phase supply Δ230 Y400 V 50 Hz or single phase supply 230 V 50, 60 Hz, see table on following page); 2 poles motor (UR O/A 5 and 7) and 4 poles motor (UR O/A 10 ... 46);
– one **analog manometer** (0 – 16 bar) mounted between pump and exchanger;
– one **analog thermometer** (0 – 120 °C) mounted at exchanger output;
– one **minimum pressure gauge** (with exchange contacts) mounted between pump and exchanger;
– one **supporting frame** with nameplate.

On request, several accessories are at disposal ( supplied separately, assembly is Customer's responsibility) in order to satisfy all functionality and safety needs.

– **oil temperature probe Pt100**;
– **2-threshold signalling device CT03N** (necessary also the oil temperature probe Pt100) for the mounting on rail to DIN EN 50022;
– **3-threshold signalling device CT10N** (necessary also the oil temperature probe Pt100) for the mounting on rail to DIN EN 50022;
– **bi-metal type thermostat**;
– **flow gauge**;
– **filter** (with optical-electric blockage warning and one or two breathers M60).

Connections realized by flexible pipes (type SAE 100 R1, maximum length 2 m) between gear reducer and cooling unit and the assembly of accessories and signalling devices are Buyer's responsibility.

For the heat exchanger power required by the independent cooling unit:

$$\boldsymbol{P}\mathrm{s} \geqslant (\boldsymbol{P}_1 - \boldsymbol{P}\mathrm{t}_N \cdot \boldsymbol{f}\mathrm{t}_1 \cdot \boldsymbol{f}\mathrm{t}_2 \cdot \boldsymbol{f}\mathrm{t}_3 \cdot \boldsymbol{f}\mathrm{t}_4) \cdot (\mathbf{1} - \boldsymbol{\eta}) \cdot \mathbf{K}_1$$

where:

| | |
|---|---|
| *P*s | nominal power of unit [kW], i.e. the power dissipated with hot oil at approx. 80 °C and cooling air at 40 °C (O/A) or cooling water at °C (O/W) with stated capacity (see following table); |
| $P_1$ | power at gear reducer input [kW] (consider the power installed when being uncertain about the power absorbed). |
| $Pt_N$ | nominal thermal power of gear reducer [kW] (see ch. 4); |
| $ft_1$ | thermal factor according to input speed (see ch. 4); |
| $ft_2$ | thermal factor according to ambient temperature (see ch. 4); |
| $ft_3$ | thermal factor according to mounting position (see ch. 4); |
| $ft_4$ | thermal factor according to altitude (see ch. 4); for UR O/A it is necessary to derate also the exchanger power: multiply *P*s by 0,85 (by 1 000 – 2 500 m above sea level) or by 0,71 (by 2 500 – 5 000 m above sea level); |
| η | gear reducer efficiency (see ch. 6); |
| $K_1$ = 1,18 | takes into account the decrease of the exchanger efficiency due to dirt on the external surface |



2586-01.02

| Designation | *P*s kW | Exchanger | Oil motor pump motor 3~ kW | Oil motor pump load dm³/min | Motor fan motor kW | Motor fan load m³/h | Oil connections Intake | Oil connections delivery | Exchanger capacity dm³ | Weight kg |
|---|---|---|---|---|---|---|---|---|---|---|
| **UR O/A 5** | **5** | AP 300E | 1,5 | 30 | 0,12 1~ | 900 | 1" (1"1/4)[2] | 1" (1"1/4)[2] | 2 | 60 |
| **UR O/A 7** | **7** | AP 300/2E | | | 0,12 1~ | 1300 | | | 3,6 | 65 |
| **UR O/A 10** | **10** | AP 430E | | | 0,21 3~ | 2750 | | | 3,6 | 70 |
| **UR O/A 13** | **13** | AP 430/2E | | | 0,18 3~ | 2700 | | | 5,5 | 75 |
| **UR O/A 16** | **16** | AP 580 EB | 2,2 | 56 | 0,18 3~ | 3500 | 1" 1/4 | 1" 1/2 (1")[1] | 15 | 96 |
| **UR O/A 21** | **21** | AP 680 EB | | | 0,69 3~ | 6300 | | | 16 | 118 |
| **UR O/A 26** | **26** | AP 730 EB | | | 0,69 3~ | 7450 | | | 16 | 127 |
| **UR O/A 30** | **30** | | 3 | 80 | 0,69 3~ | 7450 | | | | |
| **UR O/A 40** | **40** | AP 830 EB | 2,2 | 56 | 0,81 3~ | 9500 | | | 20 | 140 |
| **UR O/A 46** | **46** | | 3 | 80 | 0,81 3~ | 9500 | | | | |

| Designation | *P*s kW | Exchanger | Oil motor pump motor 3~ kW | Oil motor pump load dm³/min | Water load dm³/min | Water connect. | Oil connections Intake | Oil connections delivery | Exchanger capacity dm³ | Weight kg |
|---|---|---|---|---|---|---|---|---|---|---|
| **UR O/W 4** | **4** | T60CB1 | 0,37 | 16 | ⩾ 8 (⩽ 30) | Ø 12 | G 1/2" | G 1/2" | 0,4 | 13 |
| **UR O/W 6** | **6** | T60CB2 | 0,37 | 16 | ⩾ 10 (⩽ 30) | Ø 12 | | | 0,6 | 15 |
| **UR O/W 9** | **9** | T80CB2 | 0,55 | 16 | ⩾ 16 (⩽ 30) | Ø 12 | | | 1 | 18 |
| **UR O/W 13** | **13** | MS84P2 | 1,1 | 30 | ⩾ 25 (⩽ 45) | G 1/2" | G 3/4" | G 3/4" | 1 | 31 |
| **UR O/W 21** | **21** | MS134P1 | 1,5 | 30 | ⩾ 40 (⩽ 110) | G 1" | | | 3 | 44 |
| **UR O/W 31** | **31** | MS134P1 | 2,2 | 56 | ⩾ 50 (⩽ 110) | G 1" | G 1"1/4 | G 1"1/4 | 3 | 55 |
| **UR O/W 50** | **50** | MS134P2 | 3 | 80 | ⩾ 80 (⩽ 110) | G 1" | | | 4,5 | 70 |

**Starting mode and necessary accesories**

| Ref. | Gear reducer lubrication systems | Gear reducer starting mode | $T_{amb}$ °C | Necessary accessories | Type of oil required | Description and notes |
|---|---|---|---|---|---|---|
| **A1** | Splash lubrication | Without oil pre-heating | -25 – 25 | Pt100 + CT10N | Mineral oil or synthetic oil (to be preferred) | **Gear reducer starting and following warm oil motor pump starting**<br>The motor pump is piloted by a **three threshold** signalling system of oil temperature (Pt100 + CT10N).<br>Calibrate the three threshold device CT10N with:<br>– switching threshold at 60 °C (motor pump starting);<br>– reset threshold at 40 °C;<br>– safety threshold at 90° C. |
| **A2** | Splash lubrication | Without oil pre-heating | > 25 | – | Polyalphaolephine based synthetic oil | **Simultaneous starting of gear reducer and motor pump**<br>Oil filter not possible[4]. |
| **B1** | Forced lubrication (bearings and/or gears) | With oil pre-heating | -250 – 25 | Pt100 + CT03N<br>Pt100 + CT10N<br>Heater | Mineral oil or synthetic oil (to be preferred) | **Simultaneous starting of gear reducer and motor pump after oil pre-heating** [3]<br>The heater is piloted by the **two threshold** oil temperature signalling system (Pt100 + CT03N).<br>The motor pump and the gear reducer motor are piloted by a further **three threshold** oil temperature signalling device (Pt100 + CT10N).<br>Calibrate the two threshold device CT03N with:<br>– switching threshold at 50 °C (heater supply shut off );<br>– reset threshold at 30 °C;<br>Calibrate the three threshold device CT10N with:<br>– operating threshold at 30 °C (motor pump and gear reducer starting);<br>– reset threshold at 10 °C;<br>– safety threshold at 90 °C. |
| **B2** | Force lubrication (bearings and/or gear units) | Without oil pre-heating | > 25 | – | Polyalphaolephine based synthetic oil | **Simultaneous gear reducer and motor pump starting** [3]<br>Oil filter not possible[4]. |

1) Connection for UR O/A 16 delivery.
2) Connection for the delivery in case of filter.
3) It's advisable to delay the starting of gear reducer after the motor pump starting by 1 min at least.
4) The present of the oil filter requires that cooling unig starting is with warm oil: refer to cases A1 or B1.

Additional description when ordering by **designation**:
**independent oil-air cooling unit UR O/A ...** or **independent oil-air cooling unit UR O/W ...**, possibly integrated, when required by the application, with the description: «**Forced lubrication ...**» and the statement of bearings and/or gears to be lubricated.
For dimensions, accessories and further technical details, see specific literature.



2586-01.02

### (9) Forced bearing lubrication

All gear reducers according to train of gears, design, transmission ratio, mounting position, input speed and duty cycle can be equipped with a non-oil-bath forced bearing lubrication system through **internal piston pump** (size 4000 ... 4501) or external **lubrication system with motor pump** (see ch. 6).

The following table indicates the cases (see 💧 at ch. 8, 10) where – **according to the only mounting position** and for continous duty – it is necessary to foresee the bearing lubrication. For other operating conditions, consult us.

| Train of gears | Performance | Presence of **lubrication pump** Mounting position | | | | | |
|---|---|---|---|---|---|---|---|
| | | **B3** | **B6** | **B7** | **B8** | **V5** | **V6** |
| **2I** | **all** | – | – | – | n.a. | P | P |
| **3I** | **all** | – | – | – | n.a. | P | P |
| **4I** | **all** | – | – | – | n.a. | P | P |
| **CI** | **UO1A ... UO1N sin** | – | P | – | n.a. | P | P |
| | **UO1H ... UO1M sin** | P | P | – | n.a. | P | P |
| | **UO1V ... UO1L sin** | P | – | – | – | P | P |
| **C2I** | **UO1A ... UO1N sin** | – | P | – | n.a. | P | P |
| | **UO1H ... UO1M sin** | P | P | – | n.a. | P | P |
| | **UO1V ... UO1L sin** | P | – | – | – | P | P |
| **C3I** | **all** | – | P | – | n.a. | P | P |

– Forced bearing lubrication not necessary.
P Forced bearing lubrication necessary (with pump or motor pump).
n.a. Mounting position not foreseen.

For cases highlighted with ▲ ch. 7 and 9, foresee the lubrication with **motor pump** and possible heat exchanger (see ch. 4, 6, 12 (10)).

**IMPORTANT.** For the running at cold starting ($T_{ambient} = T_{oil} \leqslant 25$ °C) and lubrication systems (see also ch. 6 and 12 (11)), **always foresee the oil heater** (see ch. 12 (12)).

In general, when the maximum system reliability is required, in presence of particulary heavy load cycles or hard ambient conditions, it is recommended to evaluate the possibility to install anyway the bearing lubrication motor pump; consult us.

Supplementary description when ordering by **designation**: **bearing lubrication pump** or **bearing lubrication motor pump**.

12

### (10) Oil heater

Oil heater for gear reducer starting at low ambient temperature.

Specify the design «Oil temperature probe» together with this design.

The heater is piloted through proper control device (at customer's care e.g..: PLC or supplied by Rossi e.g. 2-threshold signalling device CT03N or three-threshold signalling device CT10N) releasing when achieving the pre-set oil temperature.

**IMPORTANT.** The data stated in the table refer to mounting positions **B3**; for other mounting positions, consult us.

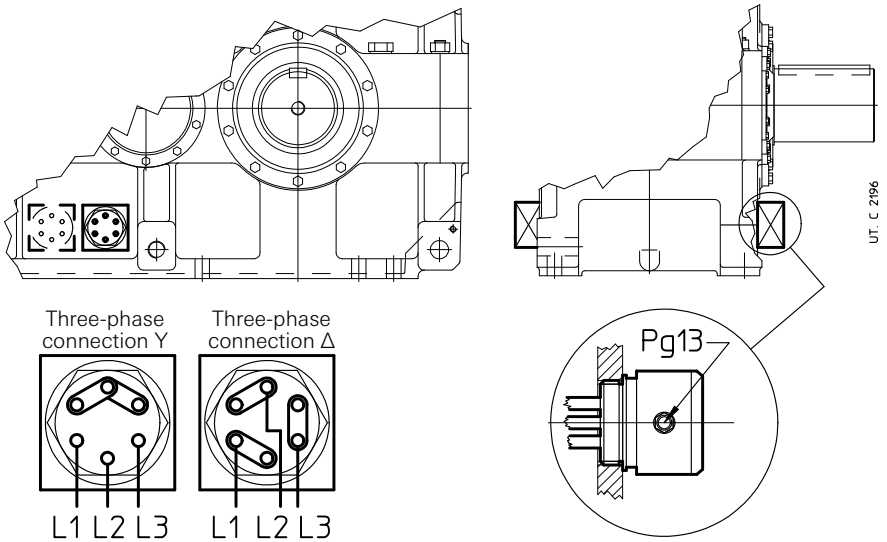


| Gear reducer size | **P** kW |
|---|---|
| **4000, 4001** | n. 2 × 1,5 |
| **4500, 4501** | n. 2 × 1,5 |
| **5000, 5001** | n. 2 × 3 |
| **5600, 5601** | n. 2 × 3 |
| **6300, 6301** | n. 2 × 3,5 |
| **7101** | n. 2 × 7,5 |
| **8001** | n. 2 × 9 |

2586-01.02

The design can be not compatible with other designs, consult us.

Features:
- specific power 2W/cm$^{2}$;
- three-phase supply Δ230 Y400 V 50-60 Hz;
- stainless steel resistors AISI 321;
- metallic terminal box; cable gland Pg13; protection IP 65;
- Horizontal mounting with oil bath lubrication;
- max oil temperature 90°C;
- threaded brass joint G 2"½;
- available also in explosion-proof design ATEX II 2G EExd IIC T4: consult us.

Available also in a version equipped with integrated thermostat.

Supplementary description when ordering by **designation**: **oil heater** or **oil heater with thermostat.**

## (11) Special painting cycles

Special painting cycles (base color blue RAL 5010), see following table, according to corrosivity class of operating environment. Other protections or colors on request: consult us.

| **Application field** | Features | Corrosivity class<br>ISO 12944-2 | Durability classes<br>ISO 12944-2 | Description | Average final thickness on machined parts<br>µm | Code |
|---|---|---|---|---|---|---|
| **Applications in aggressive environments** | Good resistance to atmospheric and aggressive agents | C4 | Low | Dual-compound epoxy primer<br>+<br>Water-soluble dual-compound enamel with acrylic-polyurethan resins | 150 | **1HRAL5010**<br>(blue) |
| | | | Medium | Dual-compound epoxy primer (× 2)<br>+<br>Water-soluble dual-compound enamel with acrylic-polyurethan resins | 200 | **2HRAL5010**<br>(blue) |
| | | | High | Dual-compound epoxy primer (× 4)<br>+<br>Water-soluble dual-compound enamel with acrylic-polyurethan resins | 300 | **3HRAL5010**<br>(blue) |
| **Outdoor applications in saline environment**<br>1) | Excellent resistance to atmospheric and aggressive agents Outdoor applications in saline environment | C 5 - M | Medium | Sanding<br>+<br>Dual-compound antirust primer with zinc phosphates<br>+<br>Dual-compound epoxy primer<br>+<br>Water-soluble dual-compound enamel with acrylic-polyurethan resins | 300 | **2IRAL5010**<br>(blue) |
| **Outdoor applications in chemically aggressive environment and high humidity industrial areas**<br>1) | Excellent resistance to atmospheric and aggressive agents Outdoor applications in chemically aggressive environment (fertilizers, etc.) | C 5 - I | Medium | Sanding<br>+<br>Dual-compound antirust primer with zinc phosphates<br>+<br>Dual-compound epoxy primer<br>+<br>Water-soluble dual-compound enamel with epoxy resins | 300 | **2LRAL5010**<br>(blue) |

1) In these cases, according to the application type, it is advised to adopt specific construction measures and accessories/ components able to offer an adequate protection for the installation environment: consult us.

Supplementary description when ordering by **designation**: **special paint ...** (see code stated in the table; e.g.: «**special painting cycle 2HRAL5010**».

### (12) High and low speed shaft seals

Available seal types (standard and on request) on high and low speed shafts are stated in the following table.

| Seal type | Scheme |
|---|---|
| Standard | 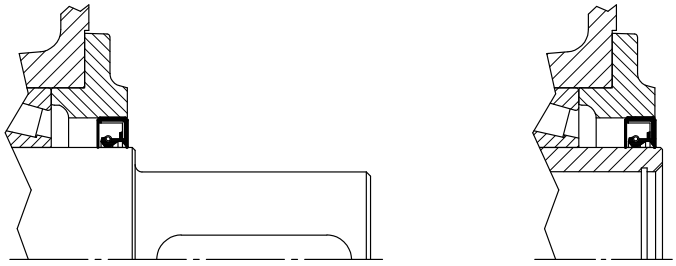 |
| **Double seal on high speed shaft**<br>Quite polluting environment and/or outdoor<br>**Low speed shaft double seal**<br>Quite polluting environment and/or outdoor | 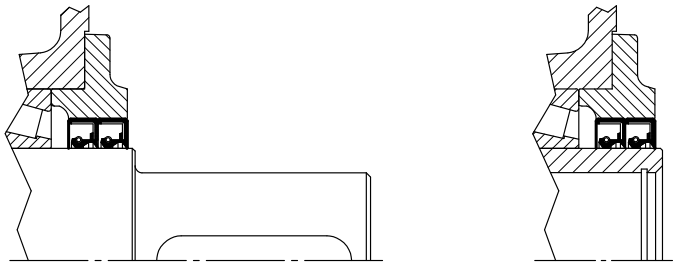 <br>Supplementary description when ordering by **designation**:<br>**double seal on high speed shaft**.<br>**double seal on low speed shaft**. |
| **High speed shaft seal with labyrinth and grease feeder («taconite»)**<br>Very polluting environment (e.g.: mining industry) | 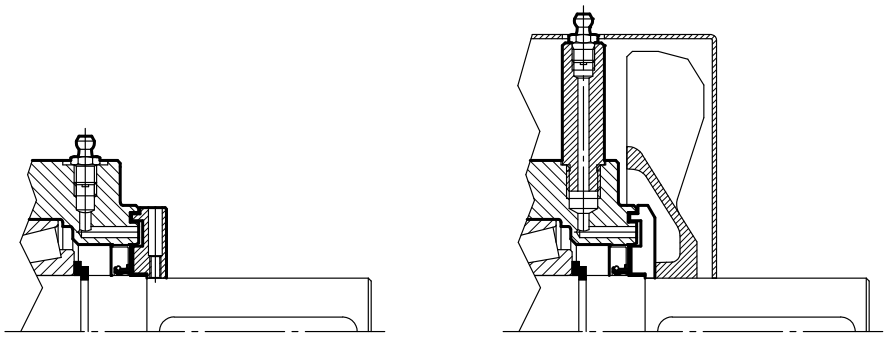 <br>Supplementary description when ordering by **designation**:<br>**high speed shaft seal with labyrinth and grease feeder.** |
| **Low speed shaft double seal with labyrinth and grease feeder («taconite»)**<br>Very polluting environment (e.g.: mining industry)<br>1) | 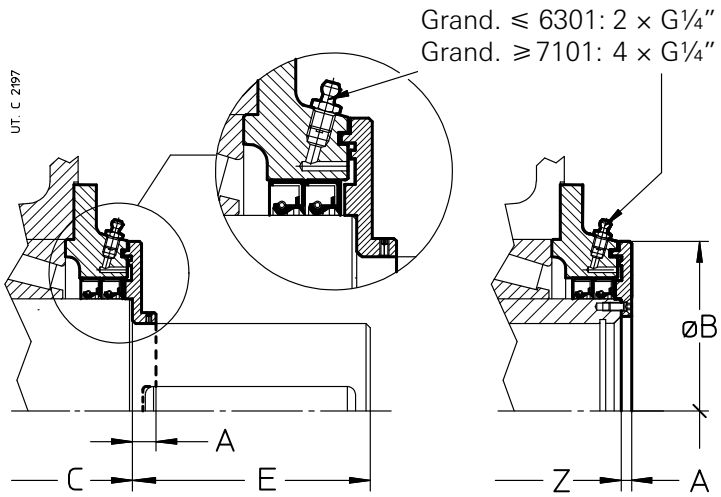 <br>Supplementary description when ordering by **designation**:<br>**low speed shaft seal with labyrinth and grease feeder.** |

| Grandezza riduttore | A | A 2) | B Ø |
|---|---|---|---|
| **4000, 4001** | 19 | 9 | 328 |
| **4500, 4501** | 19 | 9 | 368 |
| **5000, 5001** | 19 | 11 | 402 |
| **5600, 5601** | 22 | 11 | 462 |
| **6300, 6301** | 24 | 13 | 496 |
| **7101** | 0 | 10 | 653 |
| **8001** | 0 | 10 | 759 |

1) The labyrinth disc overhangs from A dimension and from shaft shoulder; the working length of low speed shaft end will be therefore equal to E - A (for dimension C and E see ch. 8 and 10); for dimension Z see ch. 12 (1), (3).

2) Values valid for hollow shaft (with keyway or shrink disc).

Notes.

- Acrylonitrilic seal ring compound as standard; fluoro compound seal rings are available on request (e.g.: for high temperatures, for aggressive environments or for high rotation speeds, etc.); specify in the designation: **fluoro compound seal**.
- The **high speed shaft double seal** is usually **not advised** as the increased heating reduces the seal life.
- In case of **double seal**, the external seal ring can be mounted on the contrary (e.g. water jets); specify in the designation: **external ring mounted on the contrary**.
- The design **high speed shaft seal with labyrinth and greaser** can be supplied only after technical feasibility evaluation by Rossi: consult us.
- The **hollow shaft with shrink disc** (see ch. 12 (1)) can be supplied with **labyrinth seal** only on shrink disc **opposite side**.

For the supplementary description when ordering by **designation**, see table on the previous page.

### (13) Desiccant breather

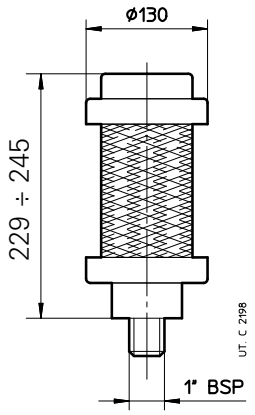


Desiccant breather with 3 stage filtration design: solid contaminant filter 2 µm, water vapor adsorbent bed in silica gel, activated carbon final filter. This filter traps water vapor and solid contaminant particles and keeps them from entering the gear box and simultaneously holds oil vapors inside the gear box.

Key features:
– replacement cartridge with true-life indicator of filter conditions
– alkali, oil, non-oxidizing acids, salt water and mineral and synthetic oils resistant;
– shock resistant cover and housing
– temperature range of application: -28 °C – +93 °C.

Supplementary description when ordering by **designation**: **Desiccant breather**

### (14) Oil level plug with dip stick

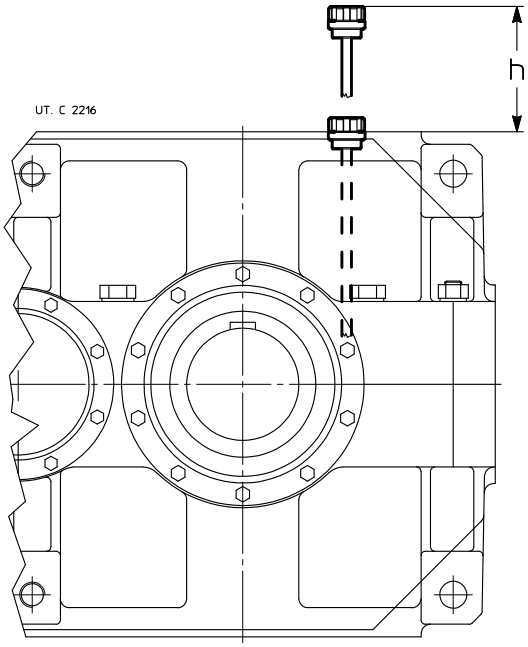


| Grandezza riduttore | h ≈ | | |
|---|---|---|---|
| | **2I, CI** | **3I, C2I** | **4I, C3I** |
| **4000, 4001** | 630 | 630 | 560 |
| **4500, 4501** | 710 | 630 | 560 |
| **5000, 5001** | 800 | 800 | 710 |
| **5600, 5601** | 900 | 800 | 710 |
| **6300, 6301** | 1000 | 900 | 800 |
| **7101** | 1120 | 1000 | 900 |
| **8001** | 1250 | 1120 | 1000 |

The data stated in the table refer to mounting position **B3** and **splash lubrication**. For further details about operating conditions, consult us.

Supplementary description when ordering by **designation**: **Oil level with dip stick**



2586-01.02

### (15) Oil drain tap

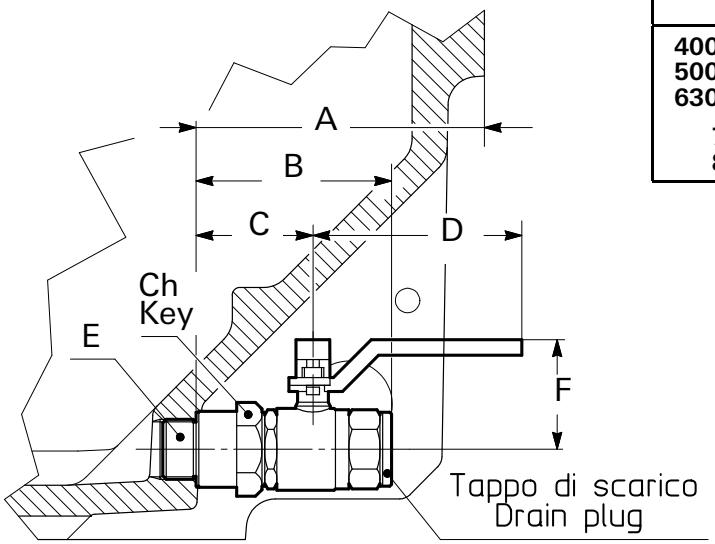


| Gear reducer size | A | B | C | D | Ch Key | E | F |
|---|---|---|---|---|---|---|---|
| **4000, 4501** | 158 | 106 | 66 | 115 | 46 | G1″ | 60 |
| **5000, 5601** | 208 | 106 | 66 | 115 | 46 | G1″ | 60 |
| **6300, 6301** | 190 | 106 | 66 | 115 | 46 | G1″ | 60 |
| **7101** | 225 | 158 | 95 | 138 | 55 | G1″¼ | 75 |
| **8001** | 280 | 170 | 102 | 158 | 60 | G1″½ | 91 |

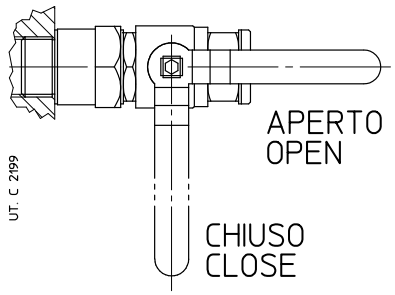


In a closed position, the tap lever does not overhang from gear reducer.
Additional description when ordering by **designation**: **oil drain tap**

### (16) Oil temperature probe

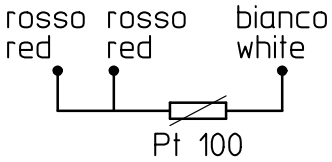


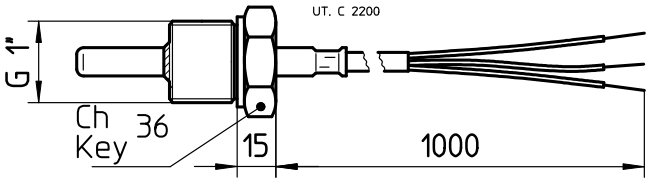


Remote oil temperature gauge; installation instead of drain plug, or into a hole properly pre-arranged by the Buyer. The temperature gauge is realized with a thermo-resistor Pt100 having following features:

- platinum wire with 100 Ω at 0 °C according to EN 60751;
- precision class B according to EN 60751;
- operation temperature field -40 °C – 200 °C;
- current max 3 mA;
- 3 wire connection according to IEC 751 (see fig. on the top);
- stainless steel probe AISI 316; diameter 6 mm;
- cable 1 m long with free end.

For the connection of probe to relevant signalling device CT03N or CT10N (on request, consult us) use a protected section cable ⩾ 1,5 mm² positioned separately from power cables.

In case of gear reducer supplied **filled with oil** foresee the probe equipped with **immersion bulb** (pre-mounted in the factory), its position is to be agreed with Rossi; consult us.

Supplementary description when ordering by **designation**: **oil temperature probe**.

### (17) Oil temperature probe with terminal box and ammetric transducer 4 ÷ 20 mA

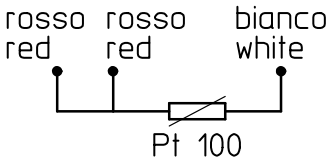


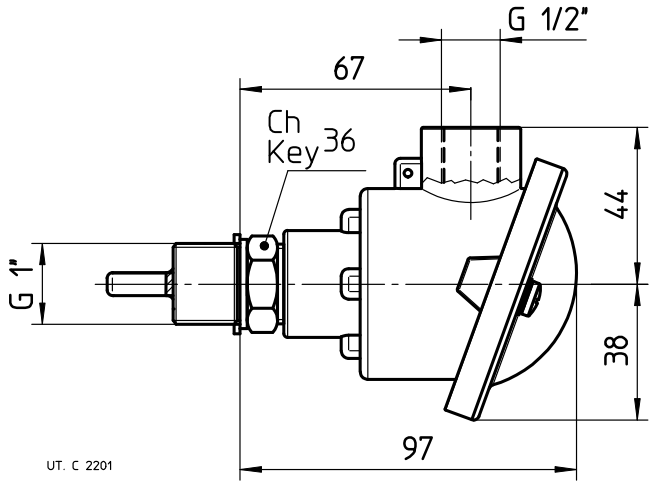


Remote oil temperature gauge, with terminal box and ammetric transducer; installation instead of drain plug or in a hole properly prearranged, at Buyer's responsibility. The temperature gauge is realized with a thermo-resistor Pt100 having following features:

- platinum wire with 100 Ω at 0 °C according to EN 60751;
- precision class B according to EN 60751;
- operation temperature field -40 °C – 200 °C;
- 3 wire connection according to IEC 751 (see fig. on the top);
- stainless steel probe AISI 316; diameter 6 mm;
- ammetric transducer with output signal 4 – 20 mA;
- alluminium terminal block (supplied without cable gland);
- IP65 protection;
- input cables G ½'';

For the connection of probe to relevant signalling device CT03N or CT10N (on request, consult us) use a protected section cable ⩾ 1,5 mm² positioned separately from power cables.

**ATTENTION**. Accessory available only after technical feasibility evaluation by Rossi: consult us.

In case of gear reducer supplied **filled with oil** foresee the probe equipped with **immersion bulb** (pre-mounted in the factory), its position is to be agreed with Rossi; consult us.

Supplementary description when ordering by **designation**: **oil temperature probe with ammetric transducer.**



2586-01.02

### (18) Bearing temperature probe

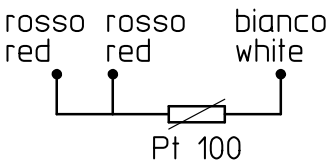


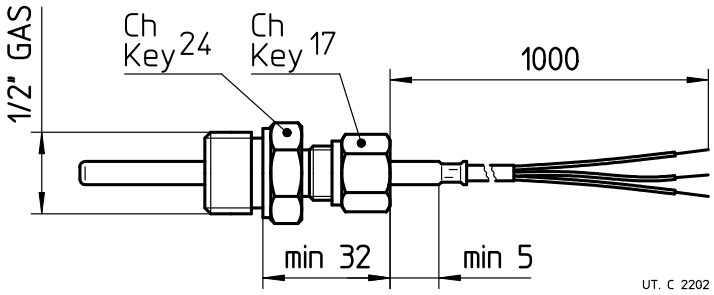


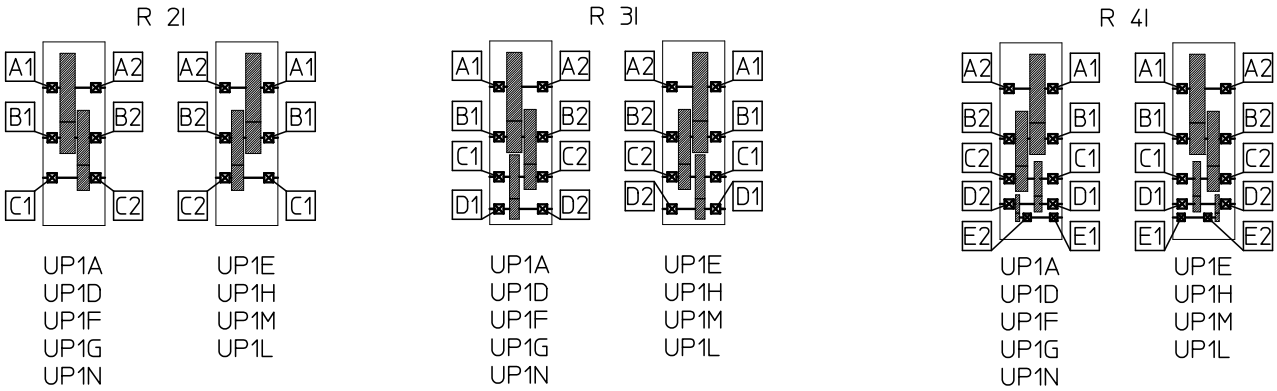


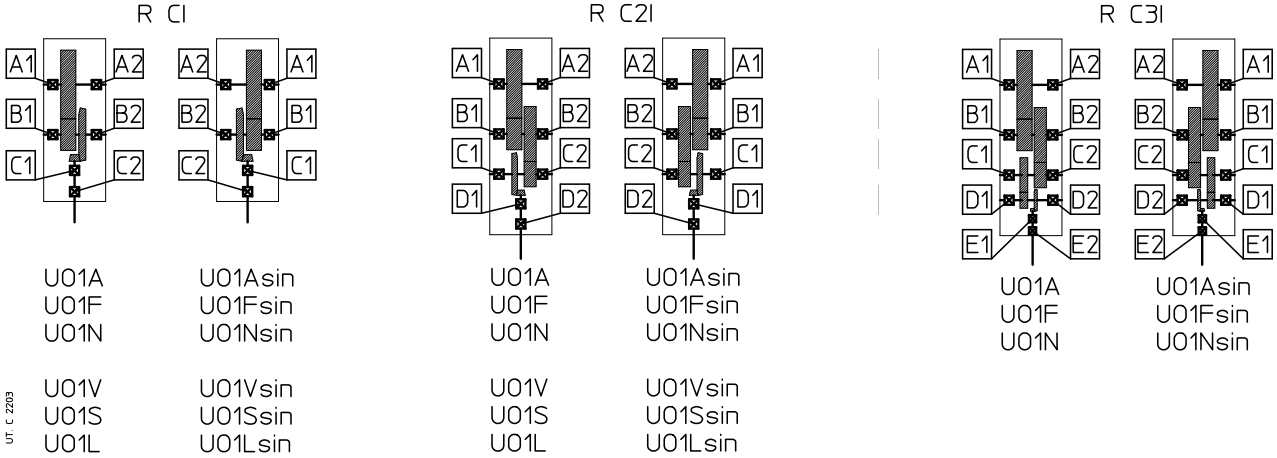


Probe for the remote monitoring of bearing temperature; installation (Buyer's responsibility) in a hole properly pre-arranged, next to a bearing **to be agreed during order phase** (for the most common cases, in order to facilitate the identification of bearing to be monitored, refer to following scheme).

The temperature gauge is realized with a thermo-resistor Pt100 having following features:

- platinum wire with 100 Ω at 0 °C according to EN 60751;
- precision class B according to EN 60751;
- operation temperature field -40 °C – 200 °C;
- max current 40 mA;
- 3 wire connection according to IEC 751 (see fig. on the top);
- stainless steel AISI 316 flat probe; diameter 6 mm;
- stainless steel **sliding** steel;
- cable 1 m long with free end.

For the connection of probe to relevant signalling device CT03N or CT10N (on request, consult us) use a protected section cable ⩾ 1,5 mm² positioned separately from power cables.

**ATTENTION**. Accessory available only after technical feasibility evaluation by Rossi: consult us.

Supplementary description when ordering by **designation**: **bearing temperature probe**.



2586-01.02

### (19) Bearing temperature probe with terminal box and ammetric transducer 4 – 20 m

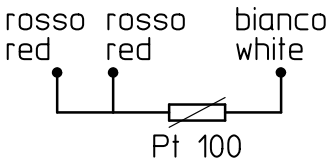


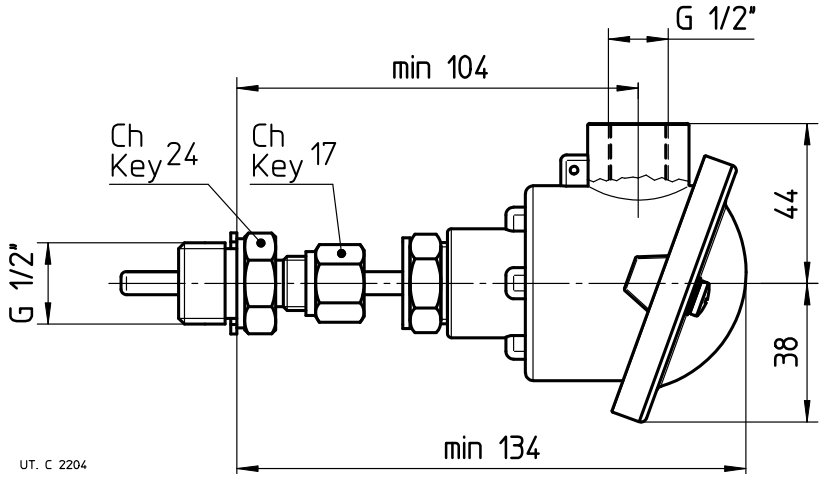


Probe for remote bearing temperature monitoring, with terminal box and ammetric transducer; installation (at Buyer's responsibility) in a threaded hole properly pre-arranged next to a bearing to be agreed when ordering (for the most common cases, in order to facilitate the identification of the bearing to be monitored, it is possible to refer to the scheme at point (18)).

The temperature gauge is realized with a thermo-resistor Pt100 having following features:

- platinum wire with 100 Ω at 0 °C according to EN 60751;
- precision class B according to EN 60751;
- operation temperature field -40 °C – 200 °C;
- 3 wire connection according to IEC 751 (see fig. on the top);
- ammetric transducer with output signal 4 – 20 mA;
- alluminium terminal block (supplied without cable gland);
- IP65 protection;
- input cables G ½'';
- stainless steel AISI 316 flat probe; diameter 6 mm;
- stainless steel **sliding** steel;
- cable 1 m long with free end.

For the connection of probe to relevant signalling device CT03N or CT10N (on request, consult us) use a protected section cable ⩾ 1,5 mm² positioned separately from power cables.

**ATTENTION**. Accessory available only after technical feasibility evaluation by Rossi: consult us.

Supplementary description when ordering by **designation**: bearing temperature probe with **ammetric transducer.**

12

### (20) Bi-metal type thermostat

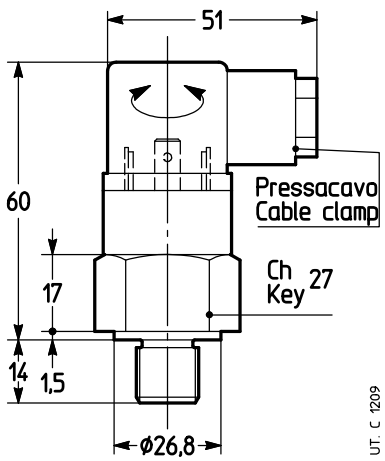


Bi-metal type thermostat for maximum oil temperature control.

Thermostat specifications:

- NC contact with maximum current 10 A 240 V a.c. (5 A - 24 V c.c.);
- G 1/2" thread connection;
- cable gland Pg09 DIN 43650;
- protection IP65;
- operating temperature 90 °C ± 5 °C (further operating temperatures are available on request);
- differential temperature 15 °C.

Mounting into a threaded plug (position to be defined according to mounting position and mounting arrangement: consult us) and oil bath lubrication is Buyer's responsibility.

**ATTENTION**. Accessory available only after technical feasibility evaluation by Rossi: consult us.

Supplementary description when ordering by **designation**: **bi-metal type thermostat**.

2586-01.02

### (21) Oil level switch with float

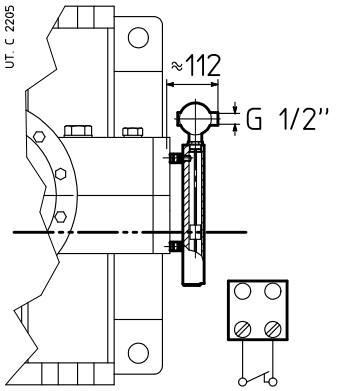


It is a level control device with reed contacts in a supporting stem moved by the magnetic field activated by the magnets included in the float.

The float and the supporting stem are included in a hollow column of not magnetic material connected to the gear reducer housing through communicating vessels.

Connecting features:
- 2 wires connection;
- max voltage: 350 V;
- maximum current: 1.5 A;
- 1 cable input 1/2" UNI 6125 – IP65;
- G 1" brass joint.

The switch is supplied ready for use; when level goes down approx 5 mm, the switch goes on and contact opens.

When filling oil in the gear reducer it is necessary to verify that device is properly calibrated. If any problems occur during this operation contact Rossi.

**ATTENTION**. Accessory available only after technical feasibility evaluation by Rossi: consult us.
Supplementary description when ordering by **designation: oil level switch with float.**

### (22) Oil optical probe

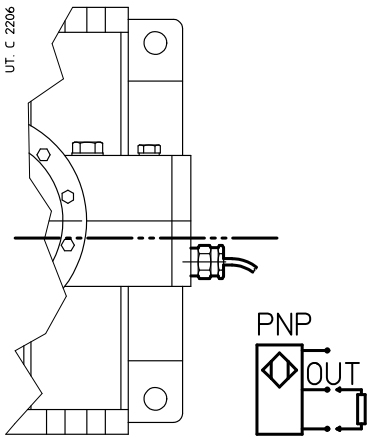


Optical scanner, without mobile parts, for the constant control of oil level, inside the gear reducer at rest (e.g. control before starting the machine or the plant).

Features:
- stainless steel probe;
- operation temperature range -40 °C – 125 °C;
- d.c. supply 12 – 28 V (other types on request; consult us);
- PNP output (other types on request, consult us), max 100 mA;
- G 1/2" thread connection.

Supplementary description when ordering by **designation**: **oil optical probe.**

12

### (24) Remote temperature indicator instrument with set point

Digital thermometer (dimensions 72×72×130 mm DIN 43700) to be used with oil or bearing temperature probe; moreover, it is equipped with switching contact (automatic reset) when reaching the (adjustable) temperature set point.

Supplementary description when ordering by **designation**: **remote temperature indicator instrument with set point.**

## Various

### – Drive units

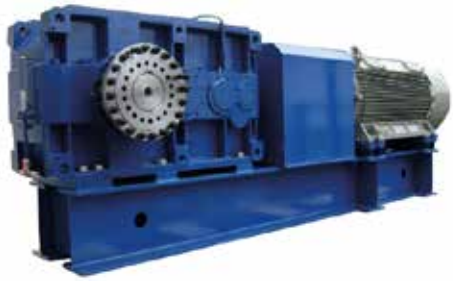

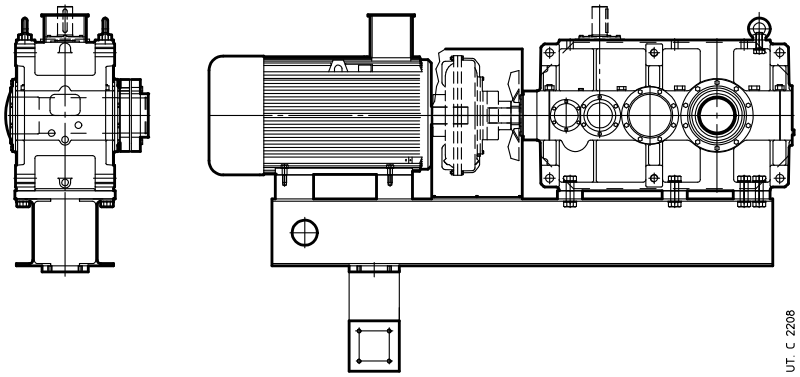


Drive units include an electric motor and a (helical or bevel helical) gear reducer, assembled on a swing base made of electrically-welded and annealed steel, properly sized, and connected through a coupling.

**Swing base**

The swing base structure is made of hollow profiles or beams properly combined, treated and machined. The project is made to maximize the swing base strength, in order to optimize costs and performance. All swing bases have been verified for bending, considering the highest load condition among the ones foreseen on this catalog.

On each swing plate there are machined surfaces for fitting and jacking screws for alignment of the components of the drive unit.

The matching point for the reaction arm has been defined in order to optimize the swing base fixing, so to minimize the stress on swing base and transmission components.

The standard supply includes the reaction point with elastic bush supplied separately (assembly is up to Customer). If necessary the complete reaction arm can be quoted and supplied, subject to agreement with Customer about characteristics and dimensions.

**Gear reducer**

The standard arrangement for this type of drive units is shaft mounted, with gearbox with hollow low speed shaft. Connection between gearbox and machine shaft is possible with keyway or shrink disc. On request it is possible to supply covers for rotating parts.

As alternative the option for shaft mounting with solid cylindrical low speed shaft, complete with rigid flanged coupling, is available.

**Joint**

The coupling can be of different types: flexible, basic hydraulic, or hydraulic with simple or double delayed fill chamber. Both types of coupling can be supplied with drum pulley for failsafe shoe brake. On request the option with disc brake is also available.

Both the coupling and the safety or parking brake (if any) are protected with a steel guard fixed to the swing base.

For further details see cat. RE: consult us.

– **Auxiliary drive**

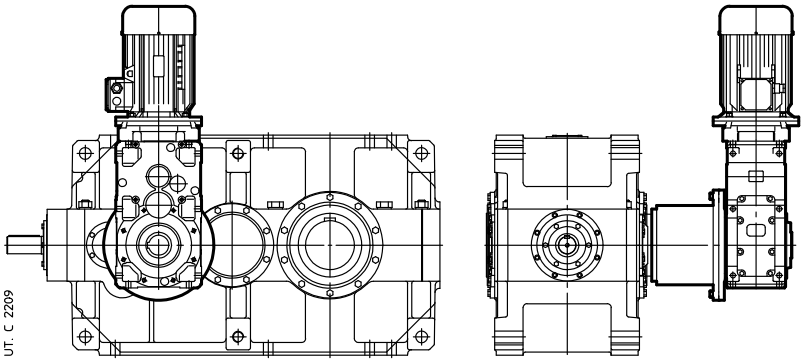


Additional motor drive with bevel helical gearmotor (cat. G, trains of gears CI, ICI, C2I) connected with main gear reducer through bell, coupling and free wheel.

– **Axial fan cooling**

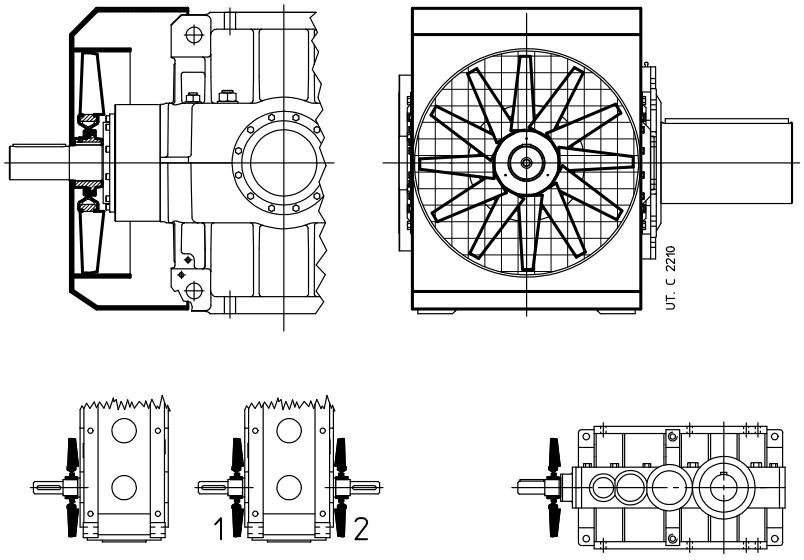


Forced cooling by axial fan for applications with one direction of rotation only (to be specified when ordering); for thermal factor values $f_{t1b}$ see ch. 4. The possible designs are those illustrated below. Dimensions on request: consult us.

12

– **Pump driven by gear reducer**

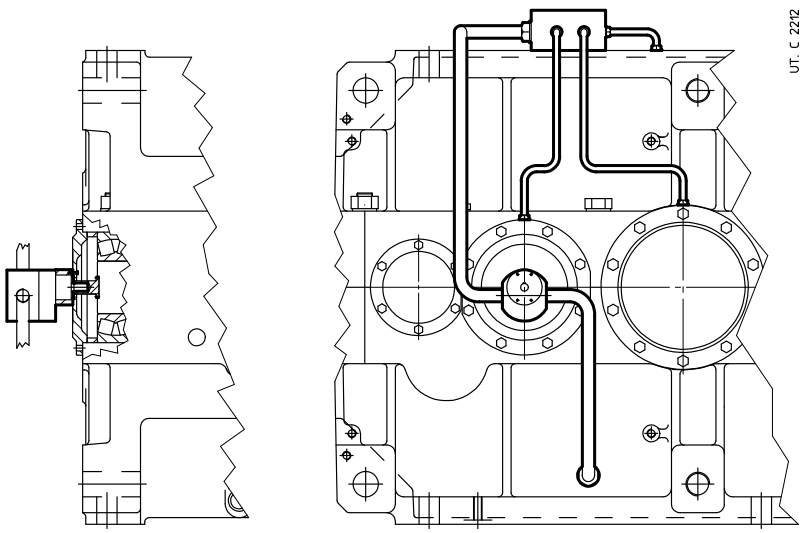


External gear pump driven directly by a gear reducer shaft for the forced lubrication of bearings and/ or gears. Self-priming operation, with non-return valve, single acting (one-way applications) or double-acting (bidirectional applications); absence of electrical power; flow rate proportional to the shaft rotational speed of the gear unit.. Dimensions and other specifications, on request: consult us.

2586-01.02

## – Additional intermediate shaft overhung for bevel helical gear reducers

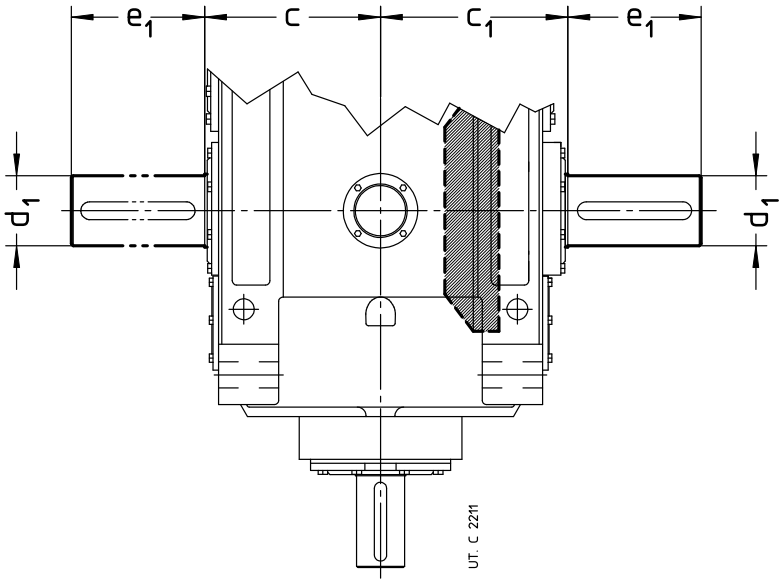


Additional (single or double) overhung of first reduction stage pinion shaft (bevel helical gear reducers' bevel wheel) for the realization of combined units or the application of auxiliary devices (e.g.: external backstop device). Main shaft end dimensions as per following table (for other dimensions see ch. 6). For sizes 7101 and 8001, consult us.

| Size | R CI | | | | R C2I | | | | R C3I | | | |
|---|---|---|---|---|---|---|---|---|---|---|---|---|
| | c | $c_1$ | $d_1$ Ø | $e_1$ | c | $c_1$ | $d_1$ Ø | $e_1$ | c | $c_1$ | $d_1$ Ø | $e_1$ |
| **4000 ... 4501** | 330 | 370 | 120 | 210 | 335 | 335 | 90 | 170 | 325 | 325 | 65 | 140 |
| **5000 ... 5601** | – | – | – | – | 430 | 430 | 110 | 210 | 405 | 405 | 80 | 170 |
| **6300, 6301** | – | – | – | – | 475 | 475 | 125 | 210 | 435 | 435 | 90 | 170 |

12

In the following table the first reduction stage transmission ratios are stated – according to total transmission ratios – thanks to which it is possible to calculate the rotation speed of auxiliary overhung.

| Train of gears | Nominal transmission ratio $i_N$ | | | | | $u_{N1}$ 1) |
|---|---|---|---|---|---|---|
| | 4000, 4001 | 4500, 4501 | 5000, 5001 | 5600, 5601 | 6300, 6301 | |
| **CI** | – | $i_N \leqslant 9$ | | | | 2 |
| | $i_N \leqslant 11{,}2$ | $10 \leqslant i_N \leqslant 12{,}5$ | | | | 2,5 |
| | $12{,}5 \leqslant i_N \leqslant 14$ | $14 \leqslant i_N \leqslant 16$ | – | – | – | 3,15 |
| | $i_N \geqslant 16$ | $i_N \geqslant 18$ | | | | 4 |
| | – | – | | | | 5 |
| **C2I** | $i_N \leqslant 25$ | $i_N \leqslant 28$ | $i_N \leqslant 25$ | $i_N \leqslant 28$ | $i_N \leqslant 31{,}5$ | 2 |
| | $28 \leqslant i_N \leqslant 40$ | $31{,}5 \leqslant i_N \leqslant 45$ | $28 \leqslant i_N \leqslant 40$ | $31{,}5 \leqslant i_N \leqslant 45$ | $40 \leqslant i_N \leqslant 50$ | 2,5 |
| | $45 \leqslant i_N \leqslant 50$ | $50 \leqslant i_N \leqslant 56$ | $45 \leqslant i_N \leqslant 50$ | $50 \leqslant i_N \leqslant 56$ | $56^{2)} \leqslant i_N \leqslant 71$ | 3,15 |
| | $56 \leqslant i_N \leqslant 80$ | $63 \leqslant i_N \leqslant 90$ | $56 \leqslant i_N \leqslant 80$ | $63 \leqslant i_N \leqslant 90$ | $i_N \geqslant 80$ | 4 |
| | $i_N \geqslant 90$ | $i_N \geqslant 100$ | $i_N \geqslant 90$ | $i_N \geqslant 100$ | | 5 |
| **C3I** | – | – | – | – | $i_N = 125$ | 2 |
| | $i_N = 125$ | $i_N = 125$ | $i_N = 125$ | $i_N = 125$ | $i_N = 160$ | 2,5 |
| | $160 \leqslant i_N \leqslant 200$ | $160 \leqslant i_N \leqslant 200$ | $160 \leqslant i_N \leqslant 200$ | $160 \leqslant i_N \leqslant 200$ | $200^{3)} \leqslant i_N \leqslant 250$ | 3,15 |
| | $i_N \geqslant 250$ | $i_N \geqslant 250$ | $i_N \geqslant 250$ | $i_N \geqslant 250$ | $i_N \geqslant 315$ | 4 |
| | – | – | – | – | | 5 |

1) First reduction stage nominal transmission ratio.
2) For R C2I 6301 with $i_N = 56$: $u_{N1} = 2{,}5$ instead of 3,15.
3) For R C3I 6301 with $i_N = 200$: $u_{N1} = 2{,}5$ instead of 3,15.

2586-01.02

– **Low speed shaft with flange coupling for shaft mounting arrangements**

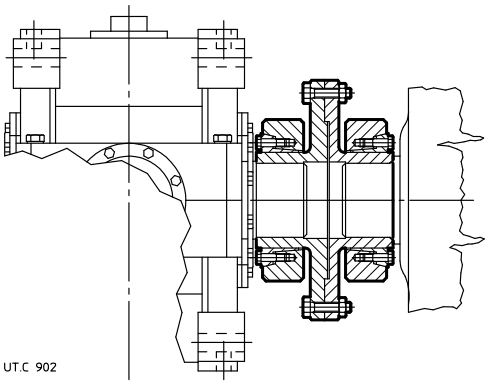


Low speed cylindrical shaft without keyway for application of a flange coupling for drive unit shaft mounting.

– **Design for extruders**

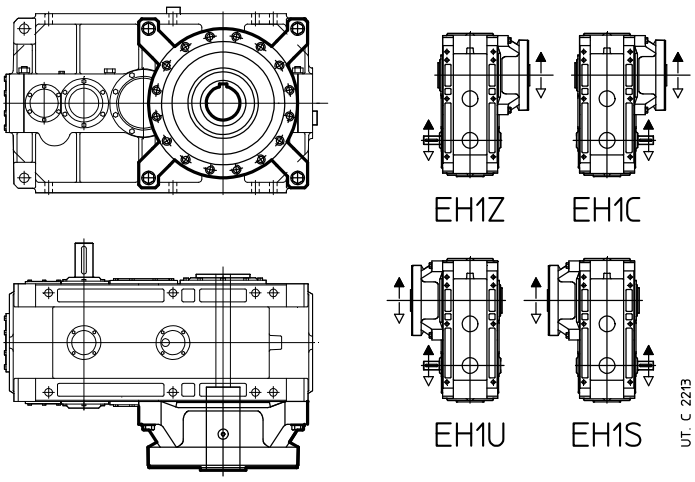


Helical gear reducers sizes 4000 ... 4501 equipped with external auxiliary support to allow the coupling with single screw extruders (see ch. GX).

12

– **Pre-arrangement for vibration monitoring devices**

Position, number and dimension of holes to be agreed when ordering.

– **ATEX design**

For the application in potentially explosive atmospheres to ATEX 2014/34/UE category 2 GD (zone 1 (gas) or 21 (dust)) or 3 GD (zone 2 (gas) or 22 (dust)), surface temperature T 135 °C (T4).

These are the main variations of the product:

- fluoro-rubber seal rings (double seal rings on low speed shaft for cat. 2 GD);
- metal plugs; filler plug with filter and valve;
- special name plate with ATEX mark and indication of application limits;
- external protection with water soluble dual compound polyurethan conductive enamel, color grey RAL 7040, corrosivity class C3 ISO 12944-2;
- oil temperature probe and eventual bearing temperature probe (cat. 2 GD).

2586-01.02

# 13 - Installation and maintenance


13.1 - Safety ..... 128
13.2 - Application conditions and use limits ..... 128
13.3 - General ..... 128
13.4 - Mounting of components on high and low speed shaft ends ..... 129
13.5 - Machine shaft end ..... 130
13.6 - Lubrication ..... 130
13.7 - Gear reducer starting at low ambient temperature ($T_{amb} = T_{oil} \leqslant 25$ °C) ..... 131
13.8 - Shaft mounting arrangements ..... 131
13.9 - Tightening torques ..... 132
13.10 - Nameplate ..... 132

## 13.1 - Safety

**IMPORTANT:** gear reducers and gearmotors supplied by Rossi are **components** and must be incorporated into machinery and **should not be commissioned before the machinery in which the components have been incorporated conforms to:**

- **Machinery directive 2006/42/EC and subsequent updatings; in particular, possible safety guards for shaft ends not being used and for eventually accessible fan cover passages (or other) are the Buyer's responsibility;**
- **«Electromagnetic compatibility (EMC)» 2004/108/EC and subsequent updatings.**

**Attention! It is recommended to pay attention to all instructions of present handbook, all existing safety laws and standards concerning correct installation. Whenever personal injury or property damage may occur, foresee adequate supplementary protection devices against:**

- **release or breakage of fastening screws;**
- **rotation or unthreading of the gear reducer from shaft end of driven machine following to accidental breakage of the reaction arrangement;**
- **the accidental breakage of shaft end of driven machine.**

**If deviations from normal operation occur (temperature increase, unusual noise, etc.) immediately switch off the machine.**

### Installation

An incorrect installation, an improper use, the removing or disconnection of protection devices, the lack of inspections and maintenance, improper connections may cause severe personal injury or property damage. Therefore the component must be moved, installed, commissioned, handled, controlled, serviced and re-paired **exclusively by responsible qualified personnel specifically instructed** and have the necessary experience to **recognize** any **risks** connected with present products avoiding any possible emergencies.

Gear reducers and gearmotors of present handbook are normally suitable for installations in **industrial areas**: additional protection measures, if necessary, must be adopted and assured by the personnel responsible for the installation.

**Attention!** Components in non-standard design or with special executions or with constructive variations may differ in the details from the ones described here following and may require additional information.

**Attention!** For the installation use and maintenance of the **electric motor** of the possible motor-variator and/or the electric supply device (frequency converter, soft-start, etc.), and/or any optional electric devices (e.g.: independent cooling unit, etc.), consult the specific attached documentation.

If necessary, require it.

### Maintenance

When operating on gear reducer or on components connected to it the **machine must be at rest**: disconnect motor (including auxiliary equipments) from power supply, gear reducer from load, be sure that safety systems are on against any accidental starting and, if necessary, pre-arrange mechanical locking devices (to be removed before commissioning).

**Attention!** During the running the gear reducers could have **hot surfaces**; Always wait that the gear reducer or the gearmotor to cool before carrying out any operations.

Further technical documentation (e.g. catalogs) can be downloaded from our website www.rossi-group.com.

13

## 13.2 - Application conditions and use limits

Gear reducers are designed **for industrial applications according to name plate data**, when no vibrations (permissible vibration velocity: $v_{eff}$ < 3,5 mm/s for $P_1 \leqslant$ 15 kW, $v_{eff}$ < 4,5 mm/s for $P_1$ > 15 kW), no nuclear radiations and important magnetic fields, with ambient temperature -20 – +40 °C (with peaks at +50 °C), with air velocity ⩾ 1,25 m/s, maximum altitude 1 000 m, and max relative humidity 80 % .

For continuous ambient temperature higher than 40 °C or lower than -20 °C consult us.

## 13.3 - General

Be sure that the structure on which gear reducer or gearmotor is fitted is plane, levelled and sufficiently dimensioned in order to assure fitting stability and vibration absence, keeping in mind all transmitted forces due to the masses, to the torque, to the radial and axial loads.

Position the gear reducer or gearmotor so as to allow a free passage of air for cooling both gear reducer and motor (especially at gear reducer and motor fan sides).

2586-01.02

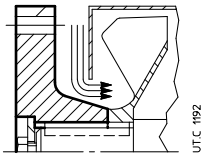


If there is fan on the gear reducer verify that there is sufficient space allowing for adequate circulation of cooling air also after fitting coupling protection. If a coupling protection is fitted smooth the coupling hub, if necessary.

Avoid: any obstruction to the air-flow; heat sources near the gear reducer that might affect the temperature of cooling-air and of gear reducer for radiation; insufficient air recycle or any other factor hindering the steady dissipation of heat.

Mount the gear reducer so as not to receive vibrations.

When external loads are present use pins or locking blocks, if necessary.

When fitting gear reducer and machine it is recommanded to use **locking adhesives** such as LOCTITE on the fastening screws (also on flange mating surfaces).

For outdoor installation or in a hostile environment protect the gear reducer or gearmotor with anticorrosion paint. Added protection may be afforded by water-repellent grease (especially around the rotary seating of seal rings and the accessible zones of shaft end).

Gear reducers should be protected wherever possible, and by whatever appropriate means, from solar radiation and extremes of weather; weather protection **becomes essential** when high or low speed shafts are vertically disposed.

For ambient temperatures greater than 40 °C or less than 0 °C, consult us.

If overloads are imposed for long periods or if shocks or danger of jamming are considered, then motor-protection, electronic torque limiters, fluid couplings, safety couplings, control units or other similar devices should be fitted.

**Attention! Bearing life, good shaft and coupling running depend on alignment precision between the shafts.** Carefully align the gear reducer with the motor and the driven machine (with the aid of shims if need be), interposing flexible couplings whenever possible.

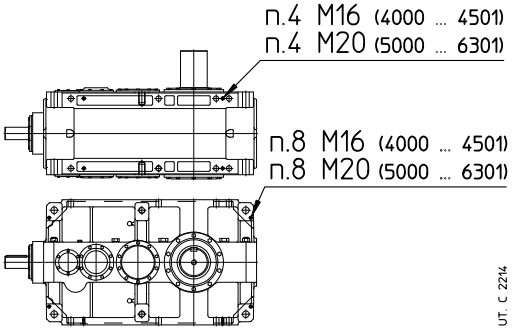


Gear reducers sizes ⩽ 6301 are equipped with **level threaded holes** on both feet surfaces and on the sides in order to permit an easy and precise positioning; after the adjustment, adequately shim.

Whenever a leakage of lubricant could cause heavy damages, increase the frequency of inspections and/or envisage appropriate control devices (e.g.: remote oil level gauge, lubricant for food industry, etc.).

In polluting surroundings, take suitable precautions against lubricant contamination through seal rings or other.

## 13.4 - Mounting of components on high and low speed shaft ends

Generally, it is recommended to machine the hole of parts keyed onto shaft end, tolerance H7. For high speed shaft end with D ⩾ 55 mm tolerance can be G7, provided that load is uniform and light. Further data according to the table «High and low speed shaft end» (ch. 6).

Before mounting, thoroughly clean mating surfaces with proper antirust products and lubricate against seizure and fretting corrosion.

Installation and removal operations should be carried out with the aid of **jacking screws** and **pullers** using the tapped hole at the shaft butt-end (see table in fig. 2) taking care to avoid impacts and shocks which may irreparably damage the bearings, the circlips or other parts or cause sparks; for H7/m6 and K7/j6 fits it is advisable that the part to be keyed is preheated to a temperature of 80 – 100 °C.

The couplings having a tip speed on external diameter up to 20 m/s must be statically balanced; for higher tip speeds they must be dynamically balanced.

Where the transmission link between gear reducer and machine or motor generates shaft end loads, ensure that: loads do not rise above catalog values:

- loads do not rise above the values stated at ch. 11 and loads do not rise above the values of the application design;
- transmission overhang is kept to a minimum;
- drive-chains should not be tensioned (if necessary – alternating loads and/or motion – foresee suitable chain tighteners); if the peripheral speed of the chain is greater than 1 m/s it is necessary to install proper malfunction markers such as aligning sensors, etc;
- in the gear transmission there is an adequate gear mesh (≈ 0,03 – 0,04 ·m) between pinion and rack (bushing);
- drive-belts should not be over-tensioned.

For splined couplings apply adequate products against oxydation.

## 13.5 - Machine shaft end

For the **shaft end** of **machine** where the hollow shaft of gear reducer is to be keyed (with shrink disc or with keyway, see ch. 12 (1) and (3)), are recommended h6 or j6 tolerances according to requirements. For dimensions see ch. 12 (1) and (3).

In order to have an easier installing and removing of gear reducers, use hollow shaft washer (on request, see ch. 12 (5)) offering a supplementary axial fastening beside the fastening of the shrink disc (if present). In these cases, when tightening the bolt, we recommend the use of a **locking adhesives** type LOCTITE 601. For vertical ceiling-type mounting, contact us. Parts in contact with the retaining ring must have sharp edges.

With hollow low speed shaft with shrink disc on machine opposite side, protect the cylindrical part of machine shaft end from shrink disc opposite side with proper products against fretting corrosion, see ch. 12.

Whenever **personal** injury or **property** damage may occur, foresee **adequate supplementary protection devices** against **rotation** or **unthreading** of the gear reducer from shaft end of driven machine following to accidental breakage of the reaction arrangements.

## 13.6 - Lubrication

Gear pairs are oil-bath lubricated.

Bearings are either oil-bathed or splashed with the exception of the top bearings which are lubricated with a pump (see ch. 12 (9)) or lubricated «for life» with grease (with or without NILOS ring according to speed).

Gear reducers are supplied **without oil**; before putting into service, fill to the specified level with **mineral oil** having the ISO viscosity grade given in the table, according to ambient temperature and output speed.

Under normal conditions the first and the second speed range are for trains of gears **2I** and **CI**, the third is for trains of gears **3I**, **4I**, **C2I** and **C3I**, while the fourth is for particular applications.

When it is required to increase oil change interval («long life»), the ambient temperature range, and/or to reduce oil temperature, use **synthetic oil** with **polyalphaolefines** basis having ISO viscosity grade as indicated in the table.

For continuous duty, the use of synthetic oil is recommended in the following case of gear reducers with size and mounting position marked with (see ch. 8, 10) and bevel helical gear reducers with double extension high speed shaft.

An overall guide to oil-change interval is given in the table, and assumes pollution-free surroundings. When heavy overloads are present, halve the values.

Apart from running hours:
- replace mineral oil at least each 3 years;
- replace or regenerate synthetic oil each 5 – 8 years according to gear reducer size, running and environmental conditions.

Never mix different makes of synthetic oil; if oil-change involves switching to a type different from that used hitherto, then give the gear reducer a through clean-out.

**Seal rings**: duration depends on several factors such as dragging speed, temperature, ambient conditions, etc.: as a rough guide, it can vary from 3 150 to 25 000 h.

**Warning**: before unscrewing the filler plug with valve (symbol ) wait until the unit has cooled and then open with caution.

ISO viscosity grade
Mean kinematic viscosity [cSt] at 40 °C.

| Speed $n_2$ min$^{-1}$ | Ambient temperature[1] [°C] | | | | |
|---|---|---|---|---|---|
| | mineral oil | | | synthetic oil | |
| | -20 – 0 | 0 – 20 | 20 – 40 | -20 – 0 | 0 – 40 |
| > **224** | 150 | 150 | 150 | 150 | 150 |
| **224 – 22,4** | 150 | 150 | 220 | 150 | 220 |
| **22,4 – 5,6** | 150 | 220 | 320 | 220 | 320 |
| < **5,6** | 220 | 320 | 460 | 320 | 460 |

| Oil temperature °C | Oil-change interval [h] | |
|---|---|---|
| | mineral oil | oil synthetic |
| ⩽ **65** | 8 000 | 25 000 |
| **65 – 80** | 4 000 | 18 000 |
| **80 – 95** | 2 000 | 12 500 |
| **95 – 110**[2] | – | 9 000 |

Oil list table

| Brand | **PAO synthetic oil** ISO VG 150 ... 460 | Mineral Oil ISO VG 150 ... 460 |
|---|---|---|
| ENI | Blasia SX | Blasia |
| ARAL | Degol PAS | Degol BG |
| BP | Enersyn EPX | Energol GR XP |
| CASTROL | Alphasyn EP | Alpha SP |
| FUCHS | Renolin Unisys CLP | Renolin CLP |
| KLÜBER | Klübersynth GEM 4 | Klüberoil GEM 1 |
| MOBIL | Mobil SHC Gear | Mobilgear 600 XP |
| SHELL | Omala S4 GX | Omala S2 G |
| TEXACO | Pinnacle | Meropa |
| TOTAL | Carter SH | Carter EP |

1) Peaks of 10 °C below and 10 °C above the ambient temperature range are acceptable. For the running at **cold starting** ($T_{amb} = T_{oil}$ ⩽ 25 °) and **forced lubrication systems**, **always foresee the oil heater** (see ch. 13 (7)).

2) Values admissible for not continuous duty, only.

## 13.7 - Gear reducer starting at low ambient temperature ($T_{amb} = T_{oil} \leqslant 25$ °C)

The **minimum** ambient temperature (equal to the oil one) to which it is allowed to start the gear reducer, depends on lubrication system and type of lubricant applied.

### Gear reducers with splash lubrication

The gear reducer can be started with ambient/oil temperature ⩾ - 20 °C, keeping in mind to follow the lubricant viscosity instructions stated on ch. 13.6.

In presence of an eventual independent cooling unit with heat exchanger (but without forced lubrication, see also point A1 in table at ch. 12 (8)), it is necessary to drive the motorpump starting when achieving oil temperature of 60 °C.

### Gear reducers with forced lubrication of bearings

In presence of forced lubrication systems of bearings (see ch. 6 and ch. 12 (8) and (9)), the gear reducer can be started only if oil temperature is ⩾ 25 °C, following the lubricant viscosity instructions as per ch. 13.6.

Therefore, before gear reducer starting it is necessary to pre-heat the oil bath through the use of heaters (see ch. 12 (10)) up to a temperature of 25 °C.

## 13.8 - Shaft mounting arrangements

The strength and shape of the housing offer advantageous possibilities for shaft mounting even – for instance – in the case of gearmotor with belt drive, hydraulic coupling, etc.

A few possible examples of shaft mounting arrangements are shown.

**IMPORTANT.** When shaft mounted, the gear reducer must be supported both axially and radially (also for mounting positions B3 ... B8) by the machine shaft end, as well as anchored against rotation only, by means of a reaction having **freedom of axial movement** and sufficient **clearance** in its couplings to permit minor oscillations always in evidence without provoking dangerous overloading on the gear reducer. Lubricate with proper products the hinges and the parts subject to sliding; when mounting the screws it is recommended to apply locking adhesives type LOCTITE 601.

In case of axial fastening with elastic constraint, in B3 or B8 mounting position, ensure that housing oscillation while running does not exceed the perfectly horizontal position.

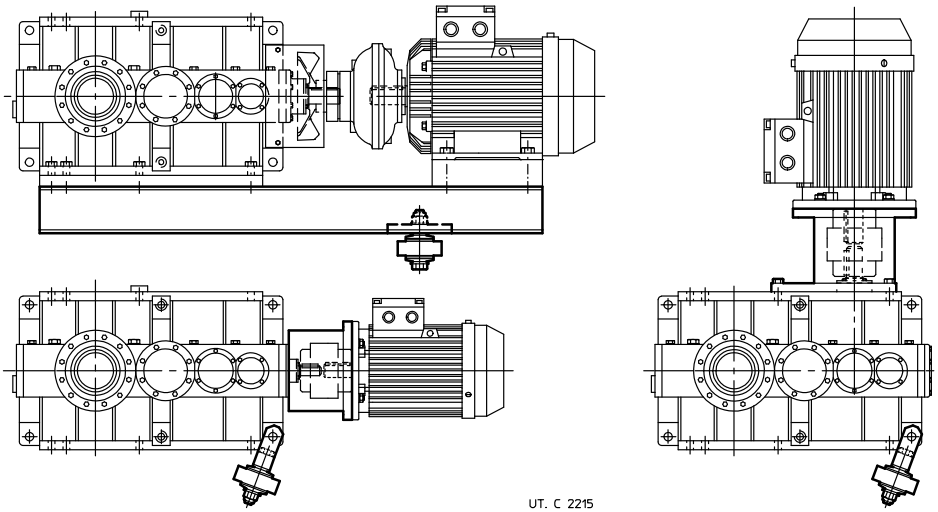


Semi flexible and economic reaction arrangement (see ch. (ch. 12 (7)): with bolt using disc springs, with bolt and fork using disc springs.

### 13.9 - Tightening torques

Unless otherwise stated, usually it is sufficient to use screws in class 8.8.

Before tightening the bolt be sure that the eventual centering of flanges are inserted properly.

In general, the bolts are to be diagonally tightened with the maximum tightening torque.

The bolts of shrink disc must be gradually and uniformly tightened, with continuous sequence (not diagonally!) and in several phases up to the reaching of maximum tightening torque.

Before tightening, carefully degrease the screws; in the event of heavy vibrations, heavy duties, frequent drive inversions apply a proper thread-locking sealant Loxeal 23-18 or equivalent.

| Bolts<br>UNI 5737-88<br>UNI 5931-84 | Tightening torque *M*s [N m] | | | |
|---|---|---|---|---|
| | Feet, flanges and threaded holes at the shaft butt-end | | | Shrink disc |
| | Class 8.8 | Class 10.9 | Class 12.9 | Class 10.9 |
| **M10** | 50 | 70 | 85 | – |
| **M12** | 85 | 120 | 145 | – |
| **M16** | 205 | 290 | 350 | – |
| **M20** | 400 | 560 | 680 | 490 |
| **M24** | 710 | 1 000 | 1 200 | 840 |
| **M27** | 1 010 | 1 400 | 1 700 | 1 250 |
| **M30** | 1 380 | 1 950 | 2 350 | – |
| **M36** | 2 500 | 3 550 | 4 200 | – |
| **M45** | 5 000 | 7 000 | 8 400 | – |
| **M56** | 9 800 | 13 800 | 16 500 | – |

### 13.10 - Nameplate

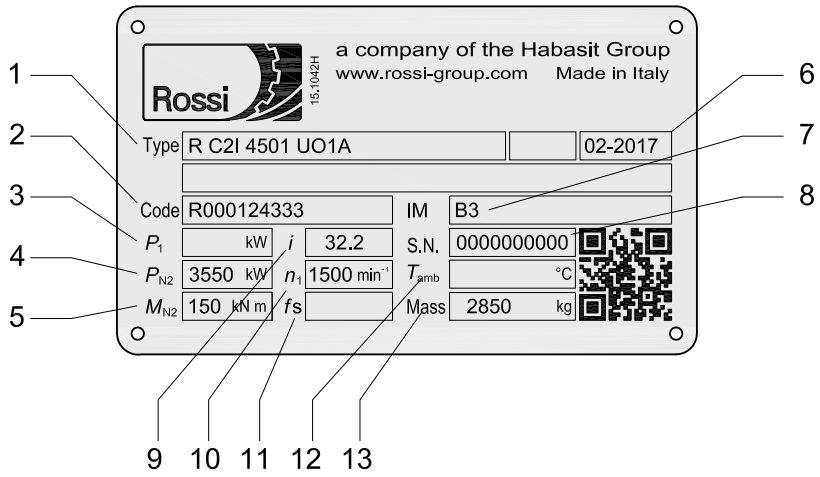


1 Designation
2 Manufacturing code
3 Installed power [kW]
4 Nominal power on low speed shaft [kW], at input speed $n_1$
5 Nominal low speed shaft torque [kN m], at input speed $n_1$
6 Month and year of production
7 Serial number
8 Mounting position
9 Transmission ratio
10 High speed shaft input speed [$min^{-1}$]
11 Service factor
12 Ambient temperature if different from conditions stated on catalog [°C]
13 Approximative gear reducer weight [kg]

# Technical formulae

Main formulae concerning mechanical drives, according to the Technical System and International Unit System (SI).

| Size | With Technical System units | With SI units |
|---|---|---|
| starting or stopping **time** as a function of an acceleration or deceleration, of a starting or braking torque | $t = \frac{v}{a-}$ [s] | |
| | $t = \frac{Gd^2 \cdot n}{375 \cdot M}$ [s] | $t = \frac{J \cdot \omega}{M}$ [s] |
| **velocity** in rotary motion | $v = \frac{\pi \cdot d \cdot n}{60} = \frac{d \cdot n}{19.1}$ [m/s] | $v = \omega \cdot r$ [m/s] |
| **angular velocity** | $n = \frac{60 \cdot v}{\pi \cdot d} = \frac{19,1 \cdot v}{d}$ [$min^{-1}$] | $\omega = \frac{v}{r}$ [rad/s] |
| **acceleration** or deceleration as a function of starting or stopping time | $a = \frac{v}{t}$ [$m/s^2$] | |
| **angular acceleration** or deceleration as a function of a starting or stopping time, of a starting or braking torque | $\alpha = \frac{n}{9,55 \cdot t}$ [$rad/s^2$] | $\alpha = \frac{\omega}{t}$ [$rad/s^2$] |
| | $\alpha = \frac{39,2 \cdot M}{Gd^2}$ [$rad/s^2$] | $\alpha = \frac{M}{J}$ [$rad/s^2$] |
| starting or stopping **distance** as a function of an acceleration or deceleration, of a final or initial velocity | $s = \frac{a \cdot t^2}{2}$ [m] | |
| | $s = \frac{v \cdot t}{2}$ [m] | |
| starting or stopping **angle** as a function of an angular acceleration or deceleration, of a final or initial angular velocity | $\varphi = \frac{\alpha \cdot t^2}{2}$ [rad] | |
| | $\varphi = \frac{n \cdot t}{19.1}$ [rad] | $\varphi = \frac{\omega \cdot t}{2}$ [rad] |
| **mass** | $m = \frac{G}{g}$ [$\frac{kgf\ s^2}{m}$] | m is the unit of mass [kg] |
| **weight** (weight force) | G is the unit of weight (weight force) [kgf] | $G = m \cdot g$ [N] |
| **force** in vertical (lifting), horizontal, inclined motion of translation ($\mu$ = coefficient of friction; $\varphi$ = angle of inclination) | $F = G$ [kgf] | $F = m \cdot g$ [N] |
| | $F = \mu \cdot G$ [kgf] | $F = \mu \cdot m \cdot g$ [N] |
| | $F = G (\mu \cdot \cos \varphi + \text{sen}\ \varphi)$ [kgf] | $F = m \cdot g (\mu \cdot \cos \varphi + \text{sen}\ \varphi)$ [N] |
| **dynamic moment $Gd^2$, moment of inertia J** due to a motion of translation (numerically $J = \frac{Gd^2}{4}$) | $Gd^2 = \frac{365 \cdot G \cdot v^2}{n^2}$ [$kgf\ m^2$] | $J = \frac{m \cdot v^2}{\omega^2}$ [$kg\ m^2$] |
| **torque** as a function of a force, of a dynamic moment or of a moment of inertia, of a power | $M = \frac{F \cdot d}{2}$ [kgf m] | $M = F \cdot r$ [N m] |
| | $M = \frac{Gd^2 \cdot n}{375 \cdot t}$ [kgf m] | $M = \frac{J \cdot \omega}{t}$ [N m] |
| | $M = \frac{716 \cdot P}{n}$ [kgf m] | $M = \frac{P}{\omega}$ [N m] |
| **work**, **energy** in motion of translation, in rotary motion | $W = \frac{G \cdot v^2}{19.6}$ [kgf m] | $W = \frac{m \cdot v^2}{2}$ [J] |
| | $W = \frac{Gd^2 \cdot n^2}{7160}$ [kgf m] | $W = \frac{J \cdot \omega^2}{2}$ [J] |
| **power** in motion of translation, in rotary motion | $P = \frac{F \cdot v}{75}$ [CV] | $P = F \cdot v$ [W] |
| | $P = \frac{M \cdot n}{716}$ [CV] | $P = M \cdot \omega$ [W] |
| **power** available at the shaft of a single-phase motor ($\cos \varphi$ = power factor) | $P = \frac{U \cdot I \cdot \eta \cdot \cos \varphi}{736}$ [CV] | $P = U \cdot I \cdot \eta \cdot \cos \varphi$ [W] |
| **power** available at the shaft of a three-phase motor | $P = \frac{U \cdot I \cdot \eta \cdot \cos \varphi}{425}$ [CV] | $P = 1,73 \cdot U \cdot I \cdot \eta \cdot \cos \varphi$ [W] |

Note. Acceleration or deceleration are understood constant; motion of translation and rotary motion are understood rectilinear and circular respectively.

## Index of revisions

List of updatings - Edition **June 2018** available on rossi.com

| | |
|---|---|
| Page 36 | Completed table with missing values |
| Page 52 | Modified figures of mounting positions |
| Page 57 | Modified figures of mounting positions |
| Page 61 | Modified figures of mounting positions |
| Pages 64-69 | New selection tables (bevel helical gear reducers) |
| Page 75 | Modified figures of mounting positions |
| Page 79 | Modified figures of mounting positions |
| Page 83 | Modified figures of mounting positions |
| Page 88 | Added note about radial and axial loads in case of hollow or double extension shafts |
| Page 102 | Added note about machine shaft end dimension in case of design 12.(12) |
| Page 102 | Added note about hollow low speed shaft tollerance |
| Page 104 | Added note about machine shaft end dimension in case of design 12.(12) |
| Page 104 | Added note about hollow low speed shaft tollerance |
| Page 104 | Modified $M_2$ values in the table |
| Page 104 | Added on machine shaft end diameter abutting with gear reducer |
| Page 106 | Modified limit transmission ratios for design 12.(4) |
| Page 108 | Amended value of X dimension (4000 ... 4501) in the table |
| Page 112 | Updated table of design 12.(9) |
| Page 113 | Updated table of design 12.(11) |
| Page 118 | Updated bearing identification scheme 12.(18) |
| Page 120 | Removed option 12.(23) |

List of updatings - Edition **2586-01.01** available on rossi.com

| | |
|---|---|
| | Range extension through the introduction of new sizes 7101 and 8001 |
| Page 24 | Updated table Nominal thermal power |
| Page 28 | Updated table Input speed |
| Page 34 | Updated table Sound levels |
| Page 36 | Updated table Low and high speed shaft end |
| Page. 37 | Updated table Side cover dimensions |
| ch. 7 | Updated selection tables (parallel shaft gear reducers) |
| Page 50 | Updated figures of mounting positions and dimensional tables |
| Page 53 | Updated oil quantity table |
| Page 54 | Updated figures of mounting positions and dimensional tables |
| Page 57 | Updated oil quantity table |
| Page 58 | Updated figures of mounting positions and dimensional tables |
| Page 61 | Updated oil quantity table |
| ch. 9 | Updated selection tables (right angle shaft gear reducers) |
| Page 76 | Updated figures of mounting positions and dimensional tables |
| Page 79 | Updated oil quantity table |
| Page 80 | Updated figures of mounting positions and dimensional tables |
| Page 82 | Updated figures of mounting positions |
| Page 83 | Updated oil quantity table |
| Page 86 | Modified radial loads table |
| Page 100 | Added axial and radial loads table sizes 7101-8001 |
| Page 101 | Added axial and radial loads table sizes 7101-8001 |
| Page 102 | Updated tables |
| Page 103 | Updated table |
| Page 105 | Updated table |
| Page 115 | Updated table |
| Page 116 | Updated table |
| Page 130 | Inserted new nameplate and updated table |

2586-01.02s

List of updatings - Edition **2586-01.02** available on rossi.com

Page 76 Updated dimensional table

Rossi
Habasit Group

Solutions for
an evolving
industry

**Rossi S.p.A.**
Via Emilia Ovest 915/A
41123 Modena - Italy

Phone +39 059 33 02 88

info@rossi.com
www.rossi.com

© Rossi S.p.A. Rossi reserves the right to make any modification whenever to this publication contents. The information given in this document only contains general descriptions and/or performance features which may not always specifically reflect those described

The Customer is responsible for the correct selection and application of product in view of its industrial and/or commercial needs, unless the use has been recommended by technical qualified personnel of Rossi, who were duly informed about Customer's application purposes. In this case all the necessary data required for the selection shall be communicated exactly and in writing by the Customer, stated in the order and confirmed by Rossi. The Customer is always responsible for the safety of product applications. Every care has been taken in the drawing up of the catalog to ensure the accuracy of the information contained in this publication, however Rossi can accept no responsibility for any errors, omissions or outdated data. Due to the constant evolution of the state of the art, Rossi reserves the right to make any modification whenever to this publication contents. The responsibility for the product selection is of the Customer, excluding different agreements duly legalized in writing and undersigned by the Parties.